APPENDIX C
PART 572(I) SIX-YEAR-OLD CHILD TEST DUMMY
PERFORMANCE VERIFICATION TEST PROCEDURE

1. PURPOSE

The purpose of this laboratory procedure is to provide child dummy users (independent testing laboratories under contract with the Office of Vehicle Safety Compliance - OVSC) with standard test procedures for conducting receiving-inspection and child restraint system dynamic test usage performance verification so that repetitive and correlative test results can be obtained. The following four component verification tests have been developed that establish a uniform verification procedure for all users prior to use of the child dummy in dynamic testing, and a means of checking certification of the dummy for purposes of compliance following testing.

A. HEAD IMPACT TEST

B. HEAD-NECK PENDULUM TEST

C. CHEST IMPACT TEST

D. LUMBAR FLEXION TEST

The performance criteria specified is intended to describe measuring tools with sufficient precision to give repetitive and correlative results under similar test conditions and to reflect adequately the protective performance of an item of motor vehicle equipment with respect to human occupants.

2. APPLICATION

This procedure does not in itself impose duties or liabilities on any person. It is a description of tools that measure the performance of occupant protection systems required by the safety standards that incorporate it. It is designed to be referenced by, and become a part of, the test procedures specified in motor vehicle safety standards such as Standard 213, Child Restraint Systems, Standard 209, Seat Belt Assemblies, and Standard 210, Seat Belt Assembly Anchorages.

3. TERMINOLOGY

Terms describing parts of the dummy, such as "head," are the same as names for corresponding parts of the human body.

APPENDIX C....Continued:

4. GENERAL REQUIREMENTS

A. Adjacent segments are joined in a manner such that throughout the range of motion and also under simulated crash-impact conditions, there is no contact between metallic elements except for contacts that exist under static conditions.

B. The structural properties of the dummy are such that the dummy conforms to this procedure in every respect both before and after being used in dynamic sled tests specified by Standard 213.

C. Performance tests of the same component, segment, assembly or fully assembled dummy are separated in time by a period of not less than 20 minutes unless otherwise specified by the COTR.

D. Surfaces of the dummy components are not painted except as specified.

E. Each six-year-old child dummy will contain an identification serial number marked on the outer skin. This number shall be used throughout the verification test program. In preparation for the verification tests, each dummy will be partially disassembled and inspected for damaged areas or components showing impending failure, which might affect its performance in subsequent tests.

All defects will be noted in the verification test report along with a list of replacement components added to the child dummy.

After the initial inspection, the outer vinyl skin of the child dummy will be cleaned to remove any residues, which may have remained from previous testing or usage. The child dummy will then be reassembled in preparation for the verification tests. The dummy will be instrumented with triaxial accelerometers in the head and chest at this time.

5. TEST EXECUTION

A. TEST CONDITIONS AND INSTRUMENTATION

(1) (A) The test probe used for HEAD IMPACT TEST and CHEST IMPACT TEST is a cylinder 76 mm (3 inches) in diameter, 351 mm (13.8 inches) long and weighs 4.7 kg (10 pounds 6 ounces). Its impacting end has a flat right face that is rigid and that has an edge radius of 12.7 mm (0.5 inches).

(B) The head and thorax assembly may be instrumented with a Type A or Type B accelerometer.

APPENDIX C....Continued:

[1] Type A accelerometer is defined in drawing SA-572 S1.

[2] Type B accelerometer is defined in drawing SA-572 S2.

(2) HEAD ACCELEROMETERS

Install one of the triaxial accelerometers in the head as shown in drawing SA 106C 001 sheet 1 using suitable spacers or adaptors as needed to affix them to the horizontal transverse bulkhead so that the sensitive axes of the three accelerometers intersect at the point in the midsagittal plane located 10.2 mm (0.4 inches) below the intersection of a line connecting the longitudinal center lines of the dummy's head with the head's midsagittal plane.

(A) The head has three orthogonal mounted accelerometers aligned as follows (see Figure C-1):

[1] Align one accelerometer so that its sensitive axis is perpendicular to the horizontal bulkhead in the midsagittal plane.

[2] Align the second accelerometer so that its sensitive axis is parallel to the horizontal bulkhead, and perpendicular to the midsagittal plane.

[3] Align the third accelerometer so that its sensitive axis is parallel to the horizontal bulkhead in the midsagittal plane.

[4] The seismic mass center for any of these accelerometers may be at any distance up to 10.2 mm (0.4 inches) from the axial intersection point.

(3) THORAX ACCELEROMETERS

Install one of the triaxial accelerometers in the thoracic assembly as shown in drawing SA 106C 001, sheet 1, using suitable spacers and adaptors to affix them to the frontal surface of the spine assembly so that the sensitive axes of the three accelerometers intersect at a point in the midsagittal plane located 24.13 mm (0.95 inches) posterior of the spine mounting surface, and 13.97 mm (0.55 inches) below the horizontal centerline of the two upper accelerometer mount attachment hole centers.

(A) The sternum-thoracic assembly has three orthogonal mounted accelerometers aligned as follows:

APPENDIX C....Continued:

PLANES OF DIRECTION

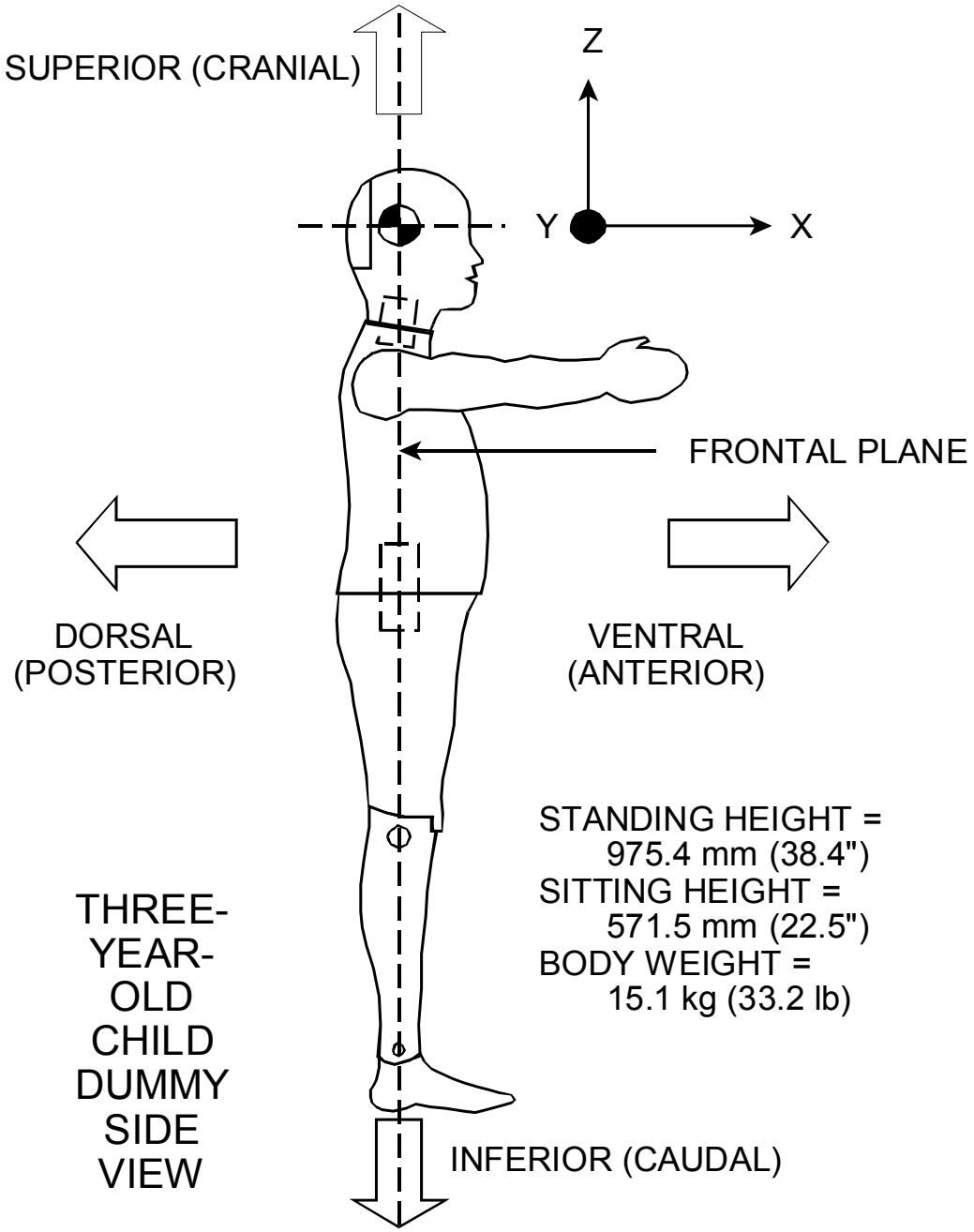

FIGURE C-1

APPENDIX C....Continued:

[1] Align one accelerometer so that its sensitive axis is parallel to the attachment surface in the midsagittal plane.

[2] Align the second accelerometer so that its sensitive axis is parallel to the attachment surface, and perpendicular to the midsagittal plane.

[3] Align the third accelerometer so that its sensitive axis is perpendicular to the attachment surface in the midsagittal plane.

[4] All seismic mass centers for any of these accelerometers may be at any distance up to 10.2 mm (0.4 inches) of the axial intersection point.

(4) Femur-sensing device. Install a force-sensing device SA 572-S10 axially in each femur shaft as shown in drawing SA 106C 072 and secure it to the femur assembly so that the distance measured between the center lines of two attachment bolts is 76.2 mm (3.0 inches).

(5) Limb joints are set at the force of 1g, barely restraining the limb's weight when the limb is extended horizontally, and ensure that the force required to move a limb segment does not exceed 2g's throughout the limb's range of motion.

(6) The outputs of acceleration and force-sensing devices installed in the dummy and in the test apparatus specified in this part, in individual channels that conform to the requirements of SAE Recommended Practice J211, October 1988, with channel classes as follows:

(A) Head acceleration - Class 1000

(B) Pendulum acceleration - Class 60

(C) Thorax acceleration - Class 180

(D) Femur-force - Class 600

(7) Performance tests are conducted at any temperature from 19°C (66°F) to 26°C (78°F) and at any relative humidity from 10 percent to 70 percent, but only after having first exposed the dummy to these conditions for a period of not less than 4 hours.

(8) For the performance tests the dummy is positioned in accordance with Figures C-2, C-3, C-7 and C-8 as follows:

APPENDIX C....Continued:

(A) Place the dummy on a horizontal seating surface covered by Teflon sheeting so that the dummy's midsagittal plane is vertical and centered on the test surface.

(B) The seating surface is flat, rigid, clean, and dry, with smoothness not exceeding 1 mm (40 micro inches), a length of at least 406 mm (16 inches), and a width of at least 406 mm (16 inches).

(C) For head impact tests, the seating surface has a vertical back support whose top is 315.0 ± 5.1 mm (12.4 ± 0.2 inches) above the horizontal surface, and the rear surfaces of the dummy's back and buttocks touch the back support as shown in Figure C-2.

(D) For the thorax, lumbar spine, and knee tests, the horizontal surface is without a back support as shown in Figure C-7 (for the thorax); Figure C-8 (for the lumbar spine); and Figure C-11(for the knee).

(E) Position the dummy's arms and legs so that their centerlines are in planes parallel to the midsagittal plane.

(F) Adjust each shoulder yoke so that with its upper surface horizontal, a yoke is at the midpoint of its anterior posterior travel.

(G) Adjust the dummy for head and knee impact tests so that the rear surfaces of the shoulders and buttocks are tangent to a transverse vertical plane.

(9) Performance tests of the same component, segment, assembly or fully assembled dummy are separated in time by a period of not less than 20 minutes unless otherwise specified.

(10) Surfaces of the dummy components are not painted except as specified by the COTR.

B. HEAD

(1) When the head is impacted by a test probe specified in 5.A.(1)(a) at 7 fps, then the peak resultant acceleration measured at the location of the accelerometer mounted in the head form in according to 5.A.(2) is not less than 130g's, and not more than 130g's.

(A) The recorded acceleration-time curve for this test is unimodal at or above the 50g level, and lays at or above that level for an interval not less than 1.0 and not more than 2.0 milliseconds.

APPENDIX C....Continued:

UPRIGHT SEATED POSITION

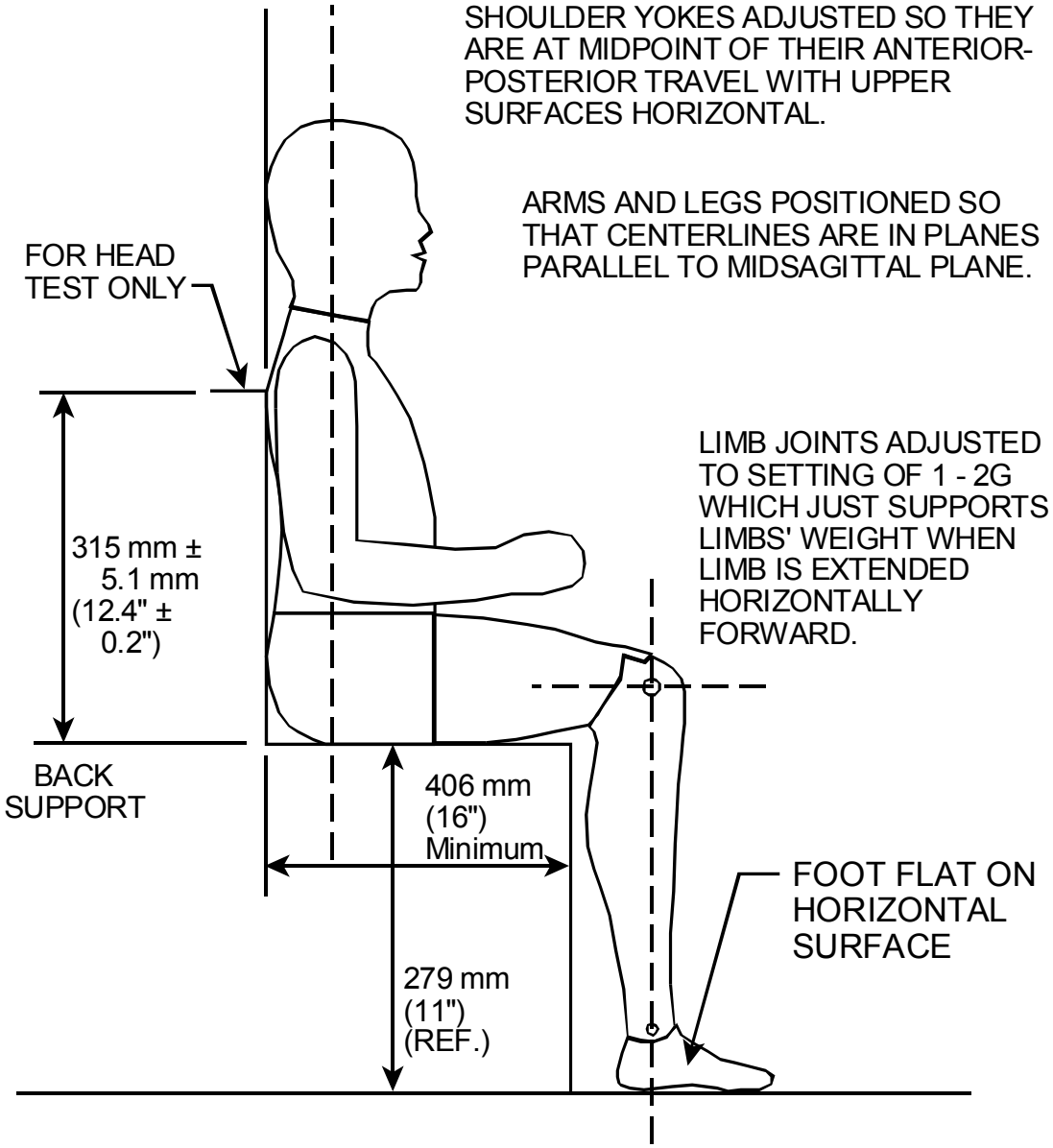

CHILD DUMMY IS PLACED ON A FLAT, RIGID, CLEAN, DRY, HORIZONTAL SURFACE OF TEFLON SHEETING WITH A SMOOTHNESS OF 40 MICROINCHES AND WHOSE LENGTH AND WIDTH DIMENSIONS ARE 406 mm (16") MINIMUM.

FIGURE C-2

APPENDIX C....Continued:

(B) The lateral acceleration vector shall not exceed 5g.

(2) TEST PROCEDURE

(A) Seat the dummy on a seating surface having a back support as specified in 5.A. (8), and shown in Figure C-3, and adjust the joints of the limbs at any setting (between 1g and 2g's) which just supports the limbs' weight when the limbs are extended horizontally forward.

(B) Adjust the test probe so that its longitudinal centerline is—

(1) At the forehead at the point of orthogonal intersection of the head midsagittal plane and the transverse plane which is perpendicular to the "Z" axis of the head as shown in Figure C-3;

(2) Located 68.6 ± 2.5 mm (2.7 ± 0.1 inches) below the top of the head measured along the "Z" axis and;

(3) Coincides within 2 degrees with the line made by the intersection of the horizontal and midsagittal planes passing through this point.

(C) Impact the head with the test probe so that at the moment of contact the probe's longitudinal centerline falls within 2 degrees of a horizontal line in the dummy's midsagittal plane.

(D) Guide the test probe during impact so that there is no significant lateral, vertical, or rotational movement.

(E) Allow at least 60 minutes between successive head tests.

C. NECK

(1) When the head-neck assembly is tested in accordance with paragraph C of this section, the head:

(A) Shall rotate, while translating in the direction of the pendulum pre-impact flight, in reference to the pendulum's longitudinal center line a total of 78 degrees ± 6 degrees about the head's center of gravity; and

APPENDIX C....Continued:

HEAD IMPACT TEST SETUP

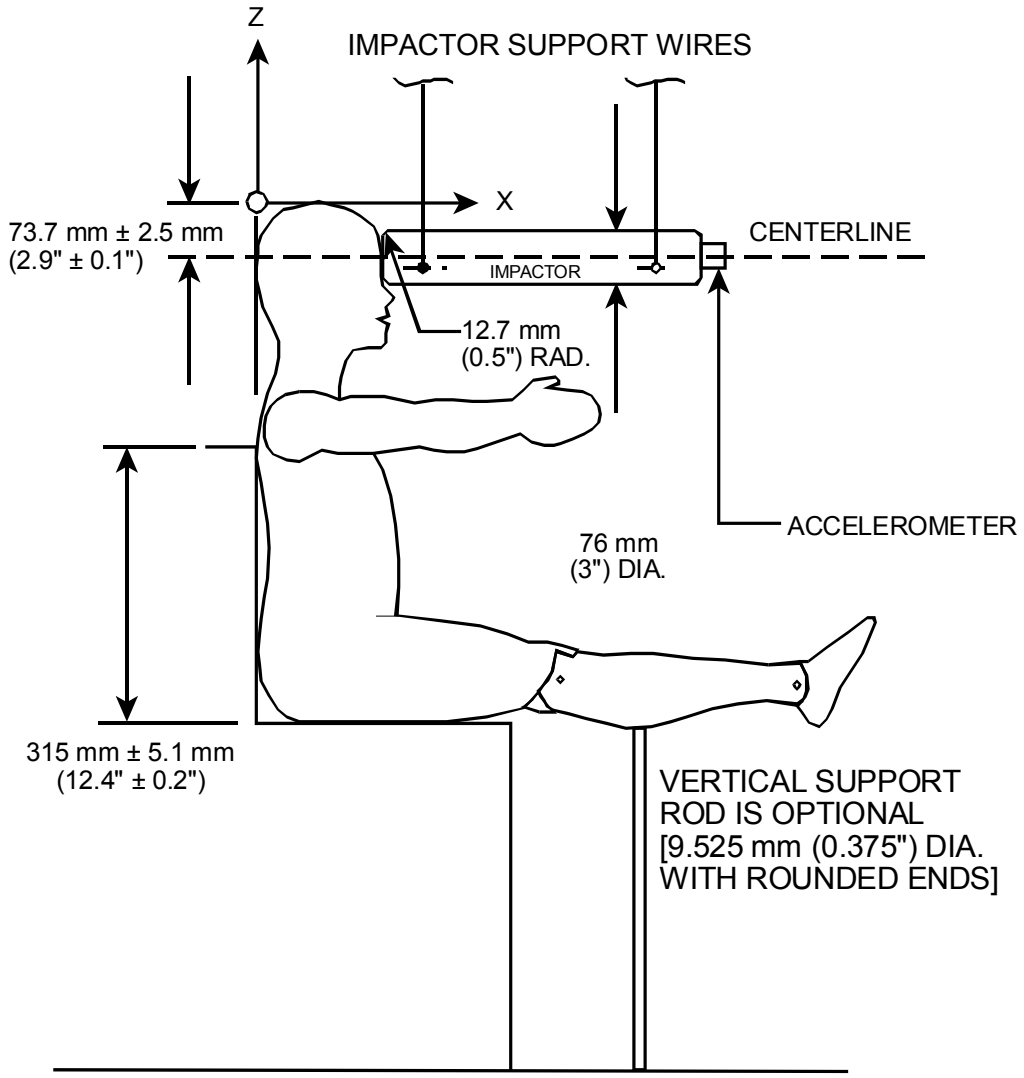

NOTES:

1. DUMMY IMPACT SENSORS NOT USED IN THIS TEST MAY BE REPLACED BY EQUIVALENT DEAD WEIGHTS.

2. NO EXTERNAL SUPPORTS ARE REQUIRED ON THE DUMMY TO MEET SETUP SPECIFICATIONS

3. THE MIDSAGITTAL PLANE OF THE DUMMY IS VERTICAL WITHIN ± 1 DEGREE

4. THE MIDSAGITTAL PLANE OF THE HEAD IS CENTERED WITH RESPECT TO THE LONGITUDINAL CENTERLINE OF THE PENDULUM WITHIN 0.12 INCHES.

FIGURE C-3

APPENDIX C....Continued:

(B) Shall rotate to the extent specified in Table B at each indicated point in time, measured from time of impact with the chordal displacement measured at the head's center of gravity.

(1) The chordal displacement at time "T" is defined as the straight-line distance between the position relative to the pendulum arm of the head's center of gravity at time "zero;" and the position relative to the pendulum arm of the head's center of gravity at time "T" as illustrated by Figure C-4.

(2) The peak resultant acceleration recorded at the location of the accelerometers mounted in the head form in accordance with 5.A. (2) shall not exceed 30g's.

(C) The pendulum shall not reverse direction until the head's center of gravity returns to the original "zero" time position relative to the pendulum arm.

ROTATION	**TIME ± (2+ 0.08t)**	**CHORDAL DISPLACEMENT ±20 mm (± 0.8")**
0°	0 ms	0 mm (0")
30°	26 ms	68.6 mm (2.7")
60°	44 ms	109.2 mm (4.3")
Maximum	68 ms	147.3 mm (5.8")
60°	101 ms	111.8 mm (4.4")
30°	121 ms	61.0 mm (2.4")
0°	140 ms	0 mm (0")

APPENDIX C....Continued:

CALCULATION OF CHORDAL DISPLACEMENT

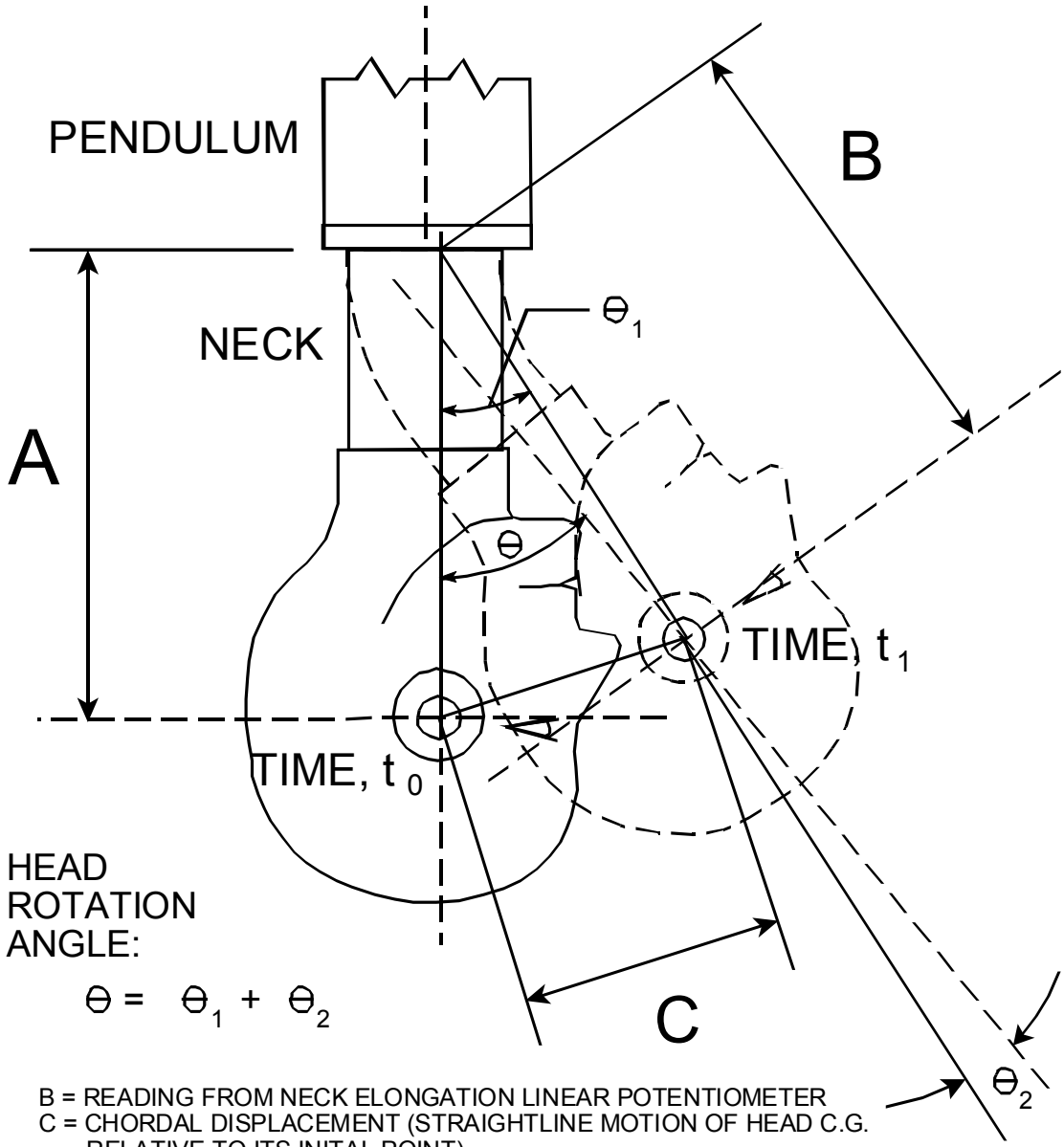

B = READING FROM NECK ELONGATION LINEAR POTENTIOMETER
C = CHORDAL DISPLACEMENT (STRAIGHTLINE MOTION OF HEAD C.G. RELATIVE TO ITS INITAL POINT)
Θ_1 = ANGLE READING FROM PENDULUM MOUNTED ROTARY POT.
Θ_2 = ANGLE READING FROM HEAD MOUNTED ROTARY POT.
COSINE LAW - THE SQUARE OF THE LENGTH OF ANY SIDE OF ANY TRIANGLE IS EQUAL TO THE SUM OF THE SQUARES OF THE LENGTHS OF THE OTHER TWO SIDES MINUS TWICE THEIR PRODUCT TIMES THE COSINE OF THE INCLUDED ANGLE.. $C^2 = A^2 + B^2 - 2AB\cos_1 \Theta$
B = A + e where e is the increase in A measured by the linear potentiometer

FIGURE C-4

APPENDIX C....Continued:

(2) Test Procedure:

(A) Mount the head and neck on a rigid pendulum as specified in Figures C-5 and C-6, so that the head's midsagittal plane is vertical and coincides with the plane of motion of the pendulum's longitudinal centerline. Mount the neck directly to the pendulum as shown in Figures C-5 and C-6.

(B) Release the pendulum and allow it to fall freely from a height such that the velocity at impact is 5.18 ± 0.30 meters per second (mps) (17.00 ± 1.0 feet per second (fps)), measured at the center of the accelerometer.

(C) Decelerate the pendulum to a stop with an acceleration-time pulse described as follows:

[1] Establish 5g and 20g levels on the a-t curve.

[2] Establish t_1 at the point where the rising a-t curve first crosses the 5g level; t_2 at the point where the rising a-t curve first crosses the 20g level; t_3 at the point where the decaying a-t curve last crosses the 20g level; and t_4 at the point where the decaying a-t curve first crosses the 5g level.

[3] $t_2 - t_1$, shall not be more than 3 ms.

[4] $t_3 - t_2$ shall not be more than 22 and not less than 19 ms.

[5] $t_4 - t_3$, shall not be more than 6 ms.

[6] The average deceleration between t_2 and t_3 shall be not more than 26g's and not less than 22g's.

APPENDIX C....Continued:

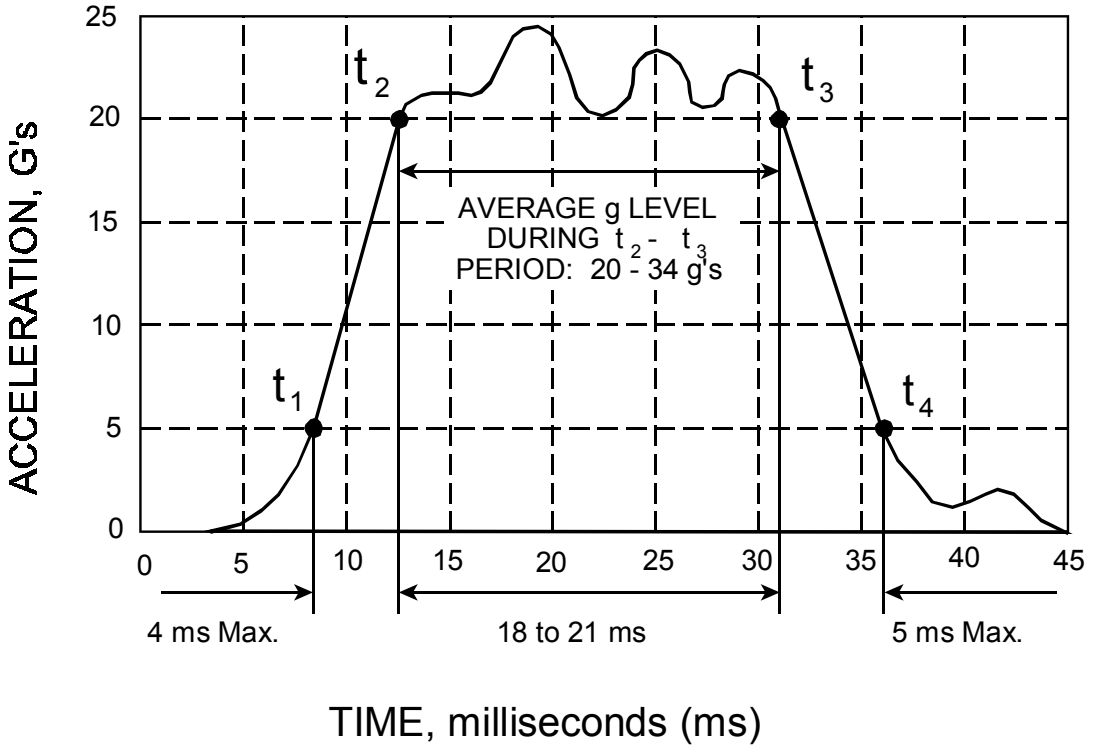

APPENDIX C....Continued:

NECK COMPONENT TEST

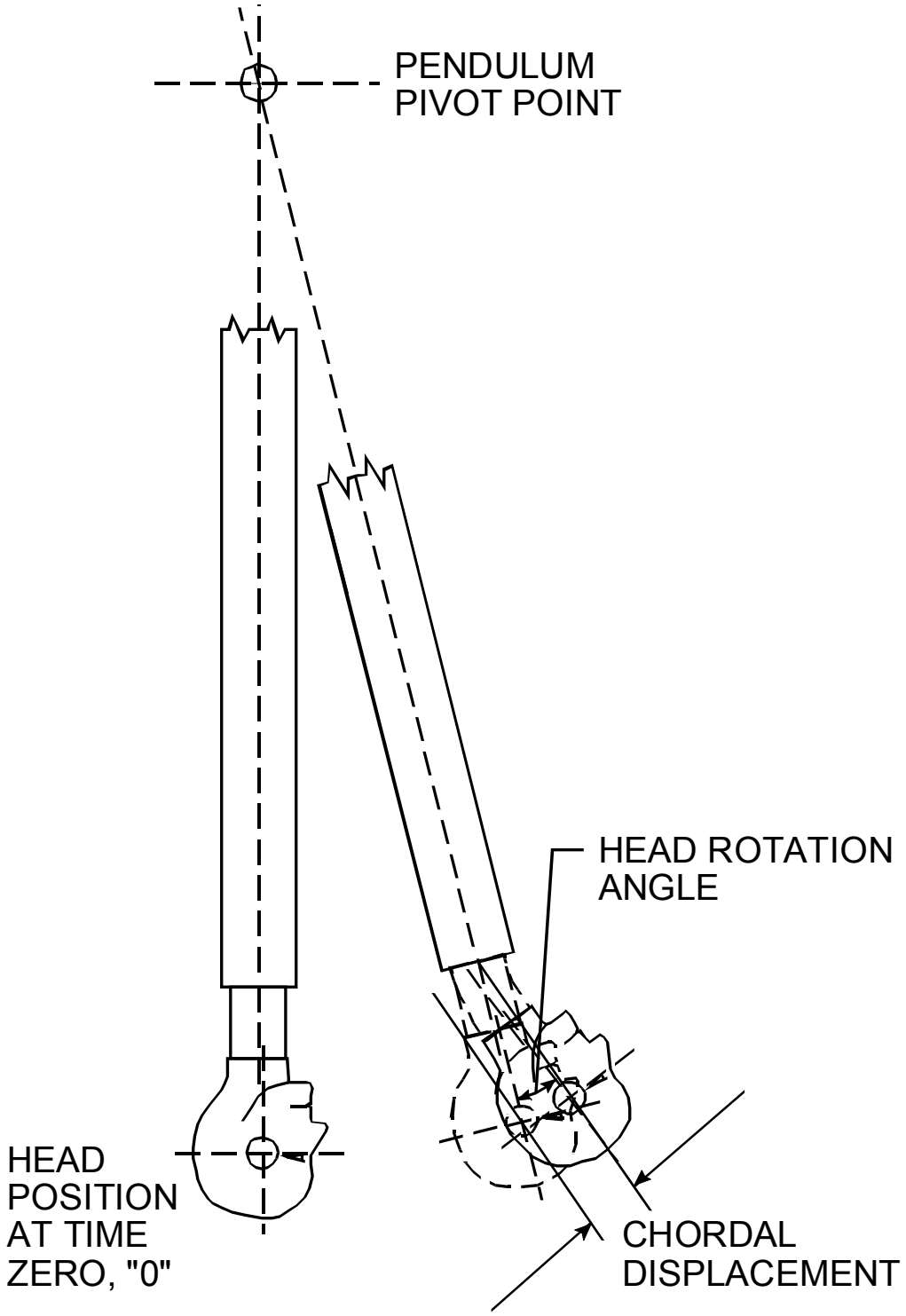

FIGURE C-5

APPENDIX C....Continued:

NECK COMPONENT TEST

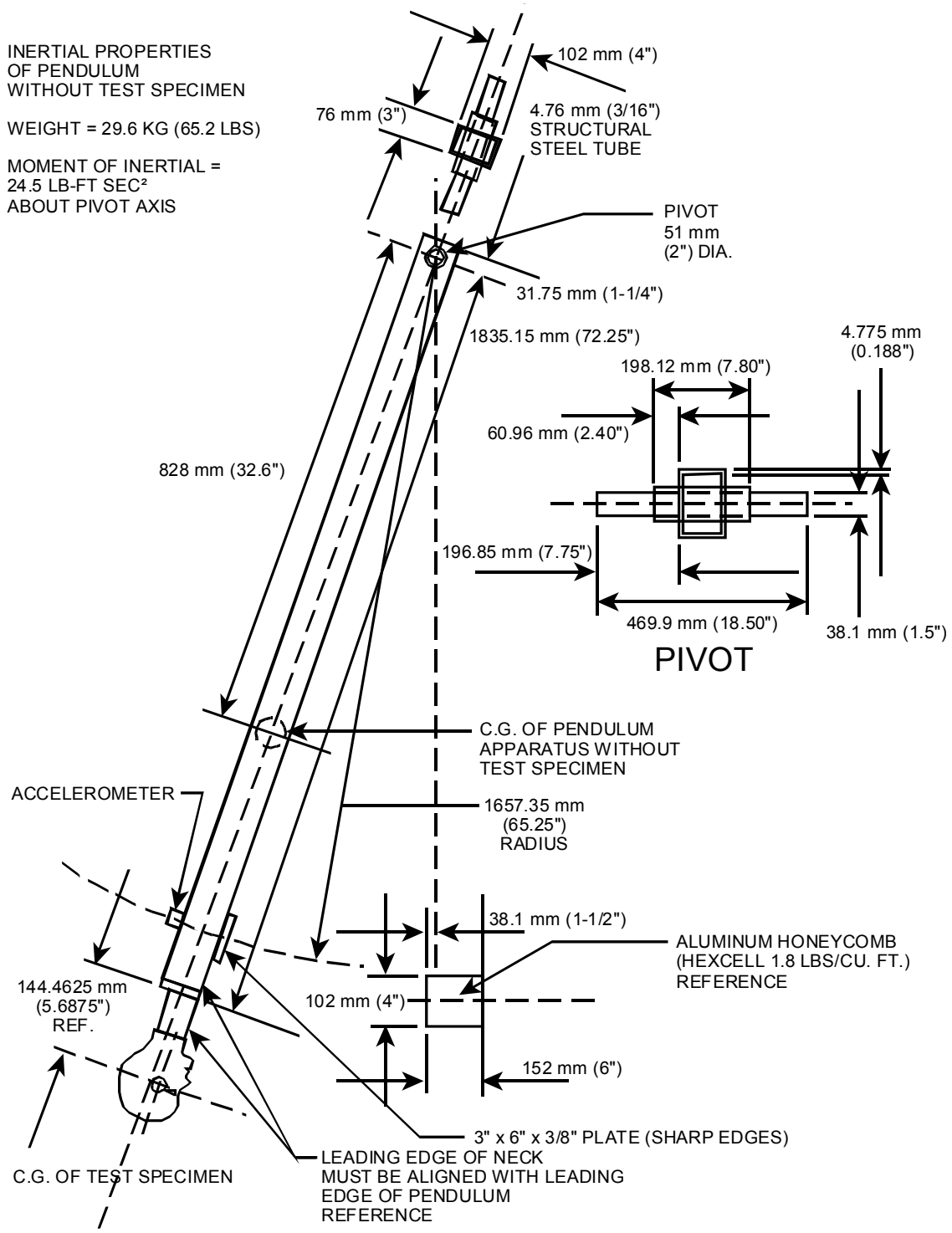

FIGURE C-6

APPENDIX C....Continued:

(3) Allow the neck to flex without the head or neck contacting any object other than the pendulum arm.

(4) Allow at least 60 minutes between successive tests.

D. THORAX

(1) When impacted by a test probe conforming to 5.A.(1)(a) at 20 ± 0.3 fps in accordance with paragraph (c) of this section, the peak resultant accelerations at the accelerometers mounted in the chest cavity in accordance with 5.A.(8) shall not be less than 43g's and not more than 53g's.

(A) The acceleration-time (a-t) curve for this test shall be unimodal at or above the 30g level, and shall lie at or above that level for an interval not less than 4 ms and not more than 6 ms.

(B) The lateral acceleration shall not exceed 5g's.

(2) TEST PROCEDURE:

(A) Seat and orient the dummy on a seating surface without back support as specified in 5.A.(8), as shown in Figures C-7 and C-8, adjust the joints of the limbs at any setting (between 1g and 2g's), which just supports the limbs' weight when the limbs are extended horizontally and forward, parallel to the midsagittal plane.

(B) Establish the impact point at the chest midsagittal plane so that it is 57.15 mm (2.25 inches) below the longitudinal center of the clavicle retainer screw, and adjust the dummy so that the plane that bisects the No.3 rib into upper and lower halves is horizontal ±1 degree.

(C) Place the longitudinal centerline of the test probe so that it coincides with the designated impact point, and align the test probe so that at impact, the probe’s longitudinal centerline coincides (within 2 degrees) with the line formed at the intersection of the horizontal and midsagittal planes passing through the designated impact point.

(D) Impact the thorax with the test probe so that at the moment of contact the probe's longitudinal centerline falls within 2 degrees of a horizontal line in the dummy midsagittal plane.

(E) Guide the probe during impact so that there is no significant lateral, vertical or rotational movement.

APPENDIX C....Continued:

THORAX IMPACT TEST SETUP

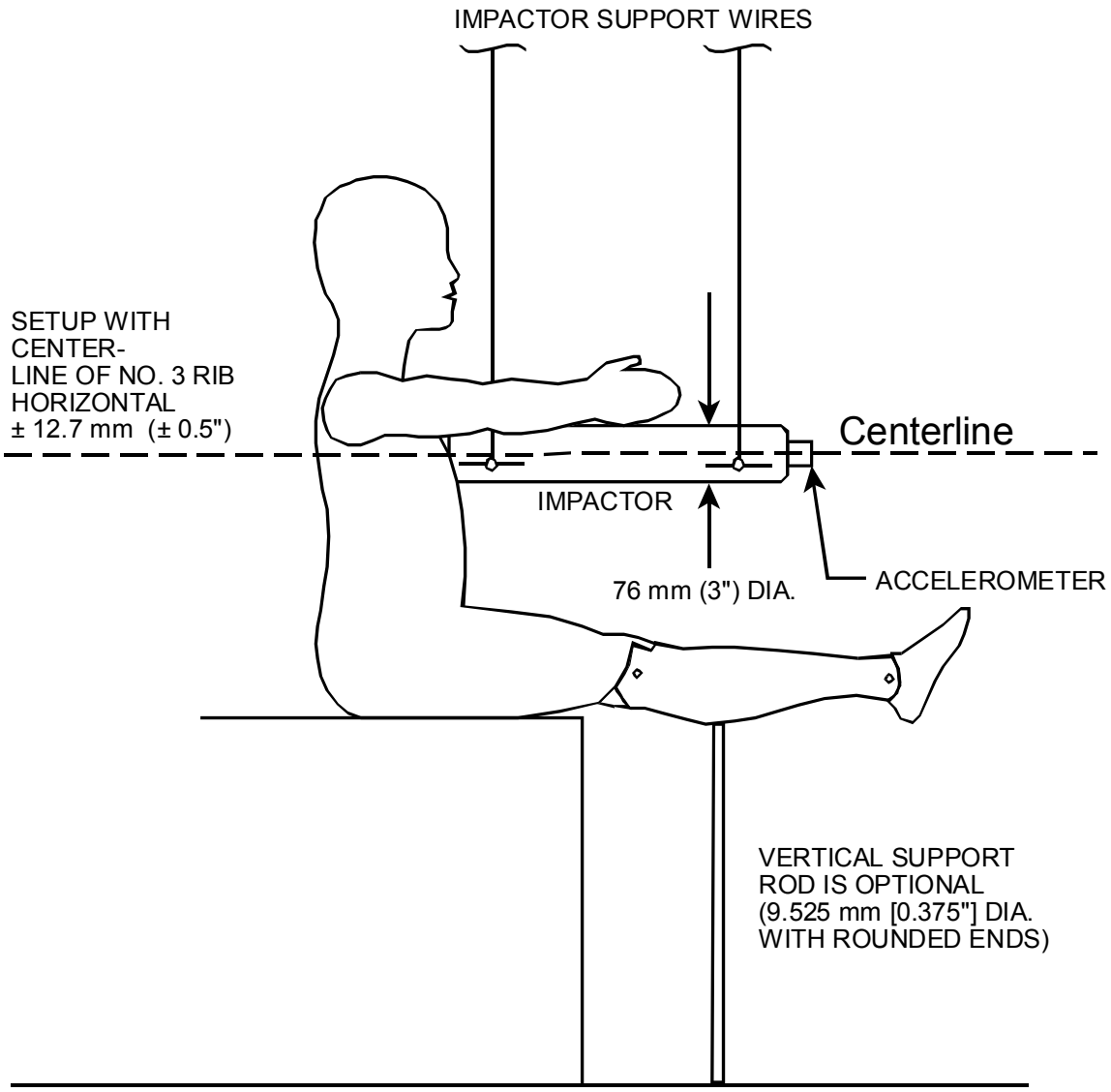

NOTES:

1. DUMMY IMPACT SENSORS NOT USED IN THIS TEST MAY BE REPLACED BY EQUIVALENT DEAD WEIGHTS.
2. NO EXTERNAL SUPPORTS ARE REQUIRED ON THE DUMMY TO MEET SETUP SPECIFICATIONS
3. THE MIDSAGITTAL PLANE OF THE DUMMY IS VERTICAL WITHIN ± 1 DEGREE
4. THE MIDSAGITTAL PLANE OF THE HEAD IS CENTERED WITH RESPECT TO THE LONGITUDINAL CENTERLINE OF THE PENDULUM WITHIN 3.05 mm (0.12").

FIGURE C-7

APPENDIX C....Continued:

CHEST IMPACT TEST

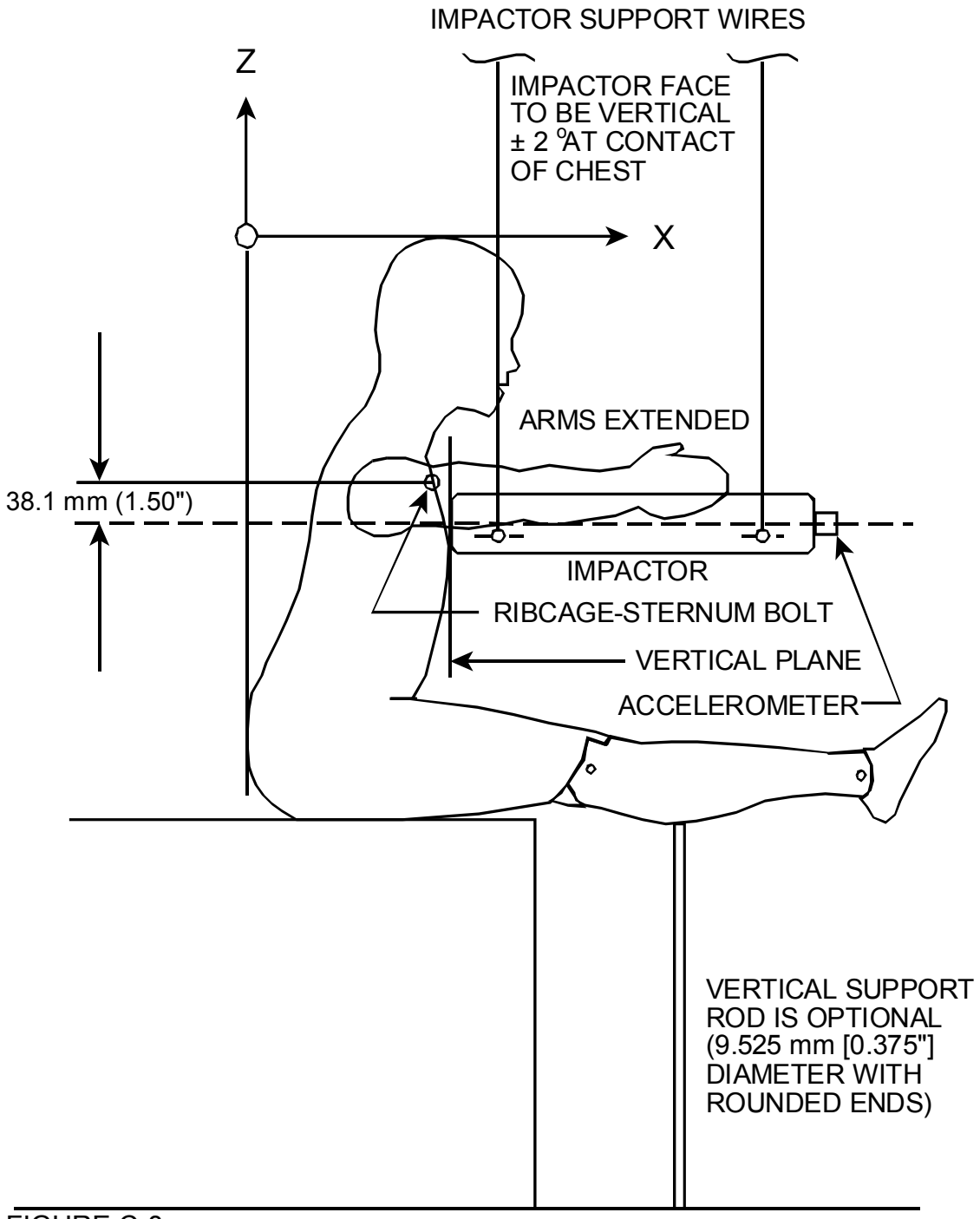

FIGURE C-8

APPENDIX C....Continued:

(F) Allow at least 30 minutes between successive tests.

E. LUMBAR

(1) When lumbar spine is subjected to a force continuously applied according with paragraph (2)(d) of this section, the lumbar spine assembly shall —

(A) Flex by an amount that permits the rigid thoracic spine to rotate from the torso's initial position in accordance with Figure C-10 by 40 degrees at a force level of not less than 206 N (46 pounds) and not more than 231 N (52 pounds), and

(B) Straighten upon removal of the force to within 5 degrees of its initial position when the force is removed.

(2) TEST PROCEDURE:

(A) Remove the dummy's head-neck assembly, arms and lower legs, clean and dry all component surfaces, and seat the dummy upright on a seat as indicated in Figures C-9 and C-10.

(B) Adjust the dummy by —

(1) Tightening the femur ball flange screws at each hip socket joint to 5.6 N-m (50 inch-pounds) torque;

(2) Attaching the pelvis to the seating surface by a bolt D/605 as shown in Figure C-9.

(3) Attaching the upper legs at the knee joints by the attachments shown in drawing Figure C-9.

(4) Tightening the mountings so that the pelvis-lumbar joining surface is horizontal; and

(5) Removing the head and neck, and installing a cylindrical aluminum adapter (neck adapter) of 50.8 mm (2.0 inches) diameter and 66.04 mm (2.6 inches) length as shown in Figure C-9.

(C) The initial position of the dummy's torso is defined by the plane formed by the rear surfaces of the shoulders and buttocks which is three to seven degrees forward of the transverse vertical plane.

APPENDIX C....Continued:

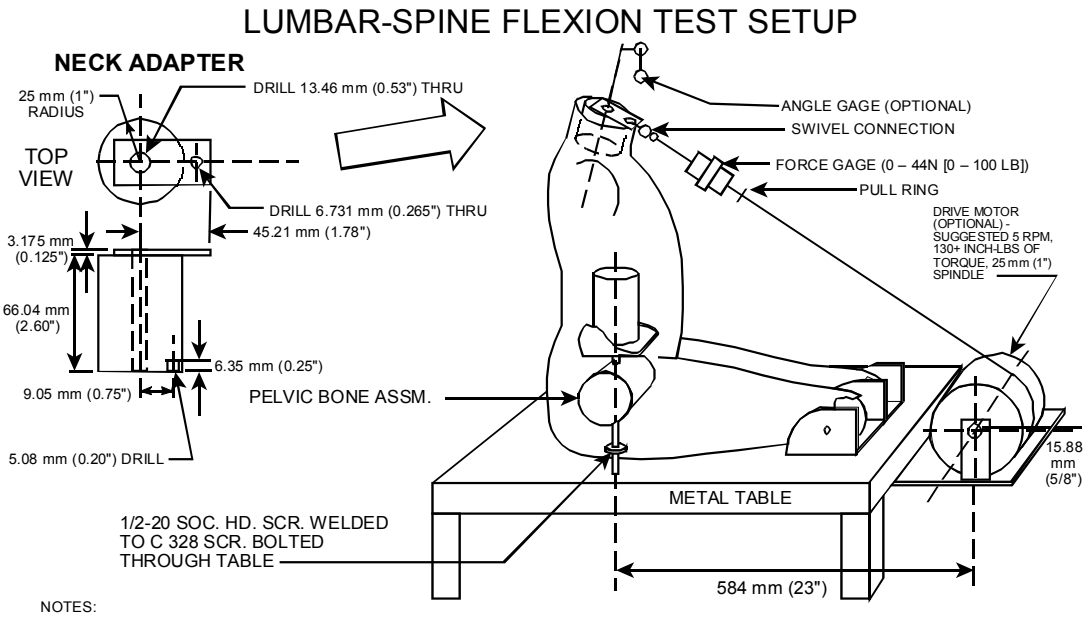

NOTES:
1. DUMMY IMPACT SENSORS NOT USED IN THIS TEST MAY BE REPLACED BY EQUIVALENT DEAD WEIGHTS.
2. NO EXTERNAL SUPPORTS ARE REQUIRED ON THE DUMMY TO MEET SETUP SPECIFICATIONS.
3. THE MIDSAGITTAL PLANE OF THE DUMMY IS VERTICAL WITHIN ± 1 DEGREE.
4. THE DUMMY IN THE SEATED POSITION IS FIRMLY AFFIXED TO THE TEST BENCH AT THE PELVIC BONE AND AT THE KNEES.
5. THE PULL-FLEXION FORCE APPLIED THROUGH A RIGID NECK ADAPTOR WHICH IS MOUNTED ON TOP OF THE THORACIC STERNUM ASSEMBLY (C/601), IS ALIGNED WITH THE MIDSAGITTAL PLANE OF THE DUMMY WITHIN ± 1 DEGREE.
6. THE SWIVEL FOR THE FORCE MEASURING SENSOR MUST NOT BIND OR BOTTOM OUT THROUGH THE ENTIRE LOADING CYCLE.

FIGURE C-9

(D) Flex the thorax forward 50 degrees and then rearward as necessary to return the dummy to its initial torso position in accordance with Figure C-9 unsupported by external means.

(E) Apply a forward pull force in the midsagittal plane at the top of the neck adapter so that when the lumbar spine flexion is 40 degrees, the applied force is perpendicular to the thoracic spine box.

(1) Apply the force at any torso deflection rate between 0.5 and 1.5 degrees per second up to 40 degrees of flexion.

(2) For 10 seconds, continue to apply a force sufficient to maintain 40 degrees of flexion, and record the highest applied force during the 10-second period.

(3) Release all force as rapidly as possible, and measure the return angle 3 minutes after the release.

APPENDIX C....Continued:

LUMBAR-SPINE FLEXION TEST

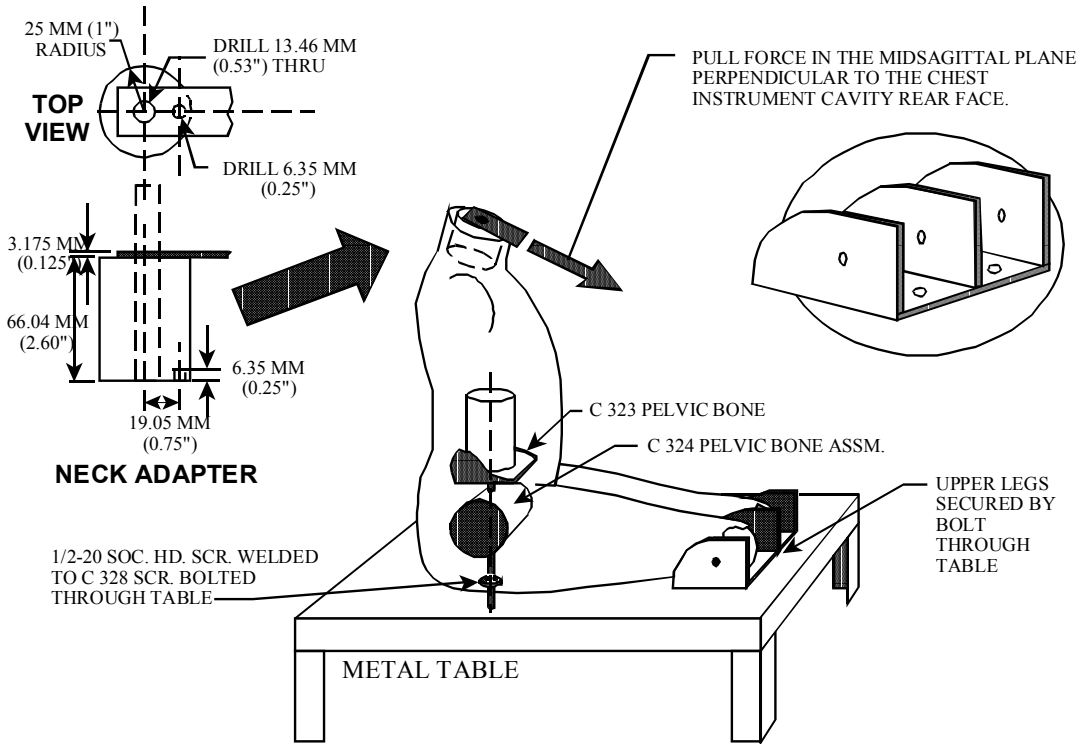

FIGURE C-10

F. LIMBS ASSEMBLY

(1) When each knee is impacted at 7.0 ± 0.1 fps, according to paragraph (2) of this section, the maximum force on the femur shall not be more than 4715 N (1060 pounds) and not less than 3470 N (780 pounds), with a duration above 1779 N (400 pounds) of not less than 0.8 milliseconds.

(2) TEST PROCEDURE:

(A) Seat and orient the dummy without back support on a seating surface that is 279.4 ± 5.1 mm (11 ± 0.2 inches) above a horizontal (floor) surface as specified in 5.A.(8).

(1) Orient the dummy as specified in Figure C-11 with the hip joint adjustment at any setting between 1g and 2g's.

(2) Place the dummy legs in a plane parallel to the dummy's midsagittal plane with the knee pivot centerline perpendicular to the dummy's midsagittal plane, and with the feet flat on the horizontal (floor) surface.

APPENDIX C....Continued:

(3) Adjust the feet and lower legs until the line between the midpoint of each knee pivot and each ankle pivot is within 2 degrees of the vertical.

(B) If necessary, reposition the dummy so that at the level 25 mm (one inch) below the seating surface, the rearmost point of the dummy's lower legs remains not less than 76 mm (3 inches) and not more than 152 mm (6 inches) forward of the forward edge of the seat.

(C) Align the test probe specified in 5.A.(1) with the longitudinal center line of the femur force gauge, so that at impact, the probe's longitudinal centerline coincides with the sensor's longitudinal centerline within g ± 2 degrees.

(D) Impact the knee with the test probe moving horizontally and parallel to the midsagittal plane at the specified velocity.

(E) Guide the test probe during impact so that there is no significant lateral, vertical or rotational movement.

APPENDIX C....Continued:

KNEE IMPACT TEST SETUP

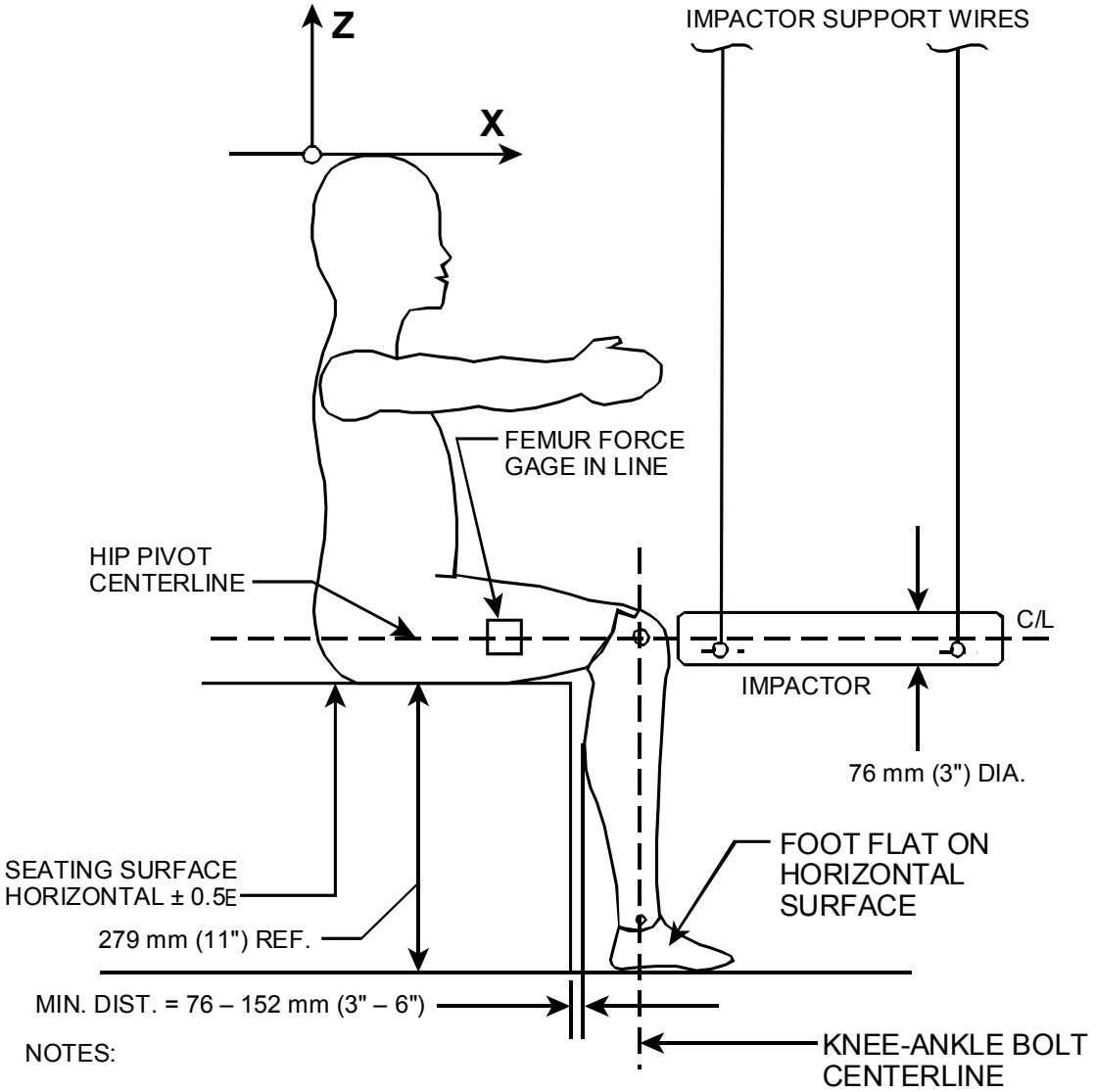

NOTES:

1. DUMMY IMPACT SENSORS NOT USED IN THIS TEST MAY BE REPLACED BY EQUIVALENT DEAD WEIGHTS.
2. NO EXTERNAL SUPPORTS ARE REQUIRED ON THE DUMMY TO MEET SETUP SPECIFICATIONS
3. THE MIDSAGITTAL PLANE OF THE DUMMY IS VERTICAL WITHIN ± 1 DEGREE
4. CENTERLINE OF THE IMPACTED FEMUR IS ALIGNED WITH THE CENTERLINE OF THE IMPACTOR AND THE PLANE OF THE IMPACTOR MOTION WITHIN ± 1 DEGREE

FIGURE C-11

APPENDIX C....Continued:

6. CHILD DUMMY VERIFICATION TEST REPORTS

Pretest and posttest verification data sheets shall be included as an appendix to the FMVSS 213 final test report. However, at the end of each restraint system test program (unless otherwise instructed by the COTR), the laboratory will submit six copies of a final child dummy verification test report for each NHTSA child dummy used in the restraint system dynamic test program. This final report will summarize the pretest and posttest verification data for one particular Part 572 child dummy in sequence by date. In other words, all head impact test data will be summarized, all head-neck pendulum test data will be summarized, etc.

Each Part 572 child dummy verification final test report shall have a standard report cover first page and title page. The other pages of the report shall be compiled in the following sequence:

TABLE OF CONTENTS –

A. Child Dummy Verification Test Data Sheets

B. Discussion of Test Results

C. Photographs of the Dummy in Each Stage of Calibration

D. List of Test Equipment (Calibration Dates, Accuracy, etc.)

E. Detailed Laboratory Test Procedure

APPENDIX C....Continued:

7. DATA SHEETS

DATA SHEET C-1
SUMMARY OF HEAD IMPACT TEST VERIFICATION DATA

CHILD DUMMY I.D. NO.: _____

TEST MEASUREMENT	PRETEST DATA	POST TEST DATA	P572 REQUIREMENT
TEST DATES			
ROOM TEMPERATURE, ◦C (◦F)			19 - 26 ◦C (66 - 78◦F)
ROOM RELATIVE HUMIDITY, %			10 - 70%
TEST PROBE IMPACT VELOCITY, mps (fps)			2.1 to 2.2 mps (6.86 to 7.14 fps)
PEAK HEAD RESULTANT ACCEL., g			95 - 118g
PEAK HEAD LATERAL ACCEL., g			≤ 7g
PULSE Δ TIME @ 50g, ms			2 - 3 ms

REMARKS:

Technician: _____ ; Date: _____

Project Manager: _____

APPENDIX C....Continued:

7. DATA SHEETS....Continued

DATA SHEET C-2
SUMMARY OF HEAD-NECK PENDULUM TEST DATA

CHILD DUMMY I.D. NO.: _____

TEST MEASUREMENT	PRETEST DATA	POST TEST DATA	P572 REQUIREMENT
TEST DATES			
ROOM TEMPERATURE, ◦C (◦F)			19 - 26 ◦C (66 - 78◦F)
ROOM RELATIVE HUMIDITY, %			10 - 70%
PENDULUM IMPACT VELOCITY, mps (fps)			4.9 to 5.5 mps (16 to 18 fps)
PENDULUM MIN./MAX. DECEL. OVER (t_3 - t_2), g			20 - 34g
PEAK HEAD RESULTANT ACCEL., g			≤ 30g
PENDULUM DECEL. PULSE Δ TIME (t_2 - t_1), ms			≤ 4 ms
PENDULUM DECEL. PULSE Δ TIME (t_3 - t_2), ms			18 - 21 ms
PENDULUM DECEL. PULSE Δ TIME (t_4 - t_3), ms			≤ 5 ms
HEAD ZERO POSITION TIME/ PENDULUM REVERSAL TIME			- / -
HEAD MAX. ROTATION ANGLE, degrees			76 - 92□
TIME (ms) @ HEAD ROT. ANGLE			
0◦			-2 - +2 ms
30◦			17.3 - 24.7 ms
60◦			31.1 - 40.9 ms
Max.			55 - 69 ms
60◦			81.7 - 100.3 ms
30◦			97.4 - 118.6 ms
0◦			111.2 - 134.8 ms
CHORD. DISPL. (in.) @ HEAD ANGLE OF-			
0◦			
30◦			
60◦			
Max.			
60◦			
30◦			
0◦			

APPENDIX C....Continued:

7. DATA SHEETS....Continued

REMARKS:

Technician: _____ ; Date: _____

Project Manager: _____

APPENDIX C....Continued:

7. DATA SHEETS....Continued

DATA SHEET C-3
SUMMARY OF CHEST IMPACT TEST DATA

CHILD DUMMY I.D. NO.:

TEST MEASUREMENT	PRETEST DATA	POST TEST DATA	P572 REQUIREMENT
TEST DATES			
ROOM TEMPERATURE, ◦C (◦F)			19 - 26 ◦C (66 - 78◦F)
ROOM RELATIVE HUMIDITY, %			10 - 70%
TEST PROBE IMPACT VELOCITY, mps (fps)			3.9 to 4 mps (12.87 to 13.13 fps)
PEAK CHEST RESULTANT ACCEL., g			50 - 70g
PEAK CHEST LATERAL ACCEL., g			≤ 5g
PULSE Δ TIME @ 30g, ms			2.5 - 4.0 ms

REMARKS:

Technician: _____ ; Date: _____

Project Manager: _____

APPENDIX C....Continued:

7. DATA SHEETS

DATA SHEET C-4
SUMMARY OF LUMBAR FLEXION TEST DATA

CHILD DUMMY I.D. NO.:

TEST MEASUREMENT	PRETEST DATA	POST TEST DATA	P572 REQUIREMENT
TEST DATES			
ROOM TEMPERATURE, ◦C (◦F)			19 - 26 ◦C (66 - 78◦F)
ROOM RELATIVE HUMIDITY, %			10 - 70%
FORCE @ 40□ FLEXION ANGLE, kg (lbs)			15.4 to 21.3 kg (34 to 47 lbs)
SPINAL COLUMN ANGLE @ 3 MIN. POST TEST, DEGREES			≤ 5°

REMARKS:

Technician: _____ ; Date: _____

Project Manager: _____

APPENDIX D
BUILT-IN CHILD RESTRAINT REPORT TEMPLATE

REPORT NUMBER: 213-ABC-#

BUILT-IN RESTRAINT SYSTEM TESTS - FMVSS NO. 213

Manufacturer
Manufacturer Child Seat - Type
Automobile

Performing Organization
Address

Date

FINAL REPORT

PREPARED FOR:
U. S. Department of Transportation
National Highway Traffic Safety Administration
400 Seventh Street, S. W.
Washington, DC 20590

APPENDIX D....Continued:

Prepared for the United States Department of Transportation, National Highway Traffic Safety Administration, under Contract No. _____. This publication is distributed by the U.S. Department of Transportation, National Highway Traffic Safety Administration, in the interest of information exchange. The opinions, findings and conclusions expressed in this publication are those of the author(s) and not necessarily those of the Department of Transportation or the National Highway Traffic Safety Administration. The United States Government assumes no liability for its contents or use thereof. If trade or manufacturers' names or products are mentioned, it is only because they are considered essential to the object of the publication and should not be construed as an endorsement. The United States Government does not endorse products or manufacturers.

REPORT ACCEPTED BY:

_____

Contract Officer's Technical
Representative (COTR)
Office of Vehicle Safety Compliance

_____

Acceptance Date

APPENDIX D....Continued:

TECHNICAL REPORT STANDARD TITLE PAGE

1. Report No.	*2. Government Accession No.*	*3. Recipient's Catalog No.*
4. Title and Subtitle Child Restraint Systems Tests - FMVSS 213 Manufacturer Manufacturer Child Seat - Type		*5. Report Date* Date *6. Performing Organization Code*
7. Author(s)		*8. Performing Organization Report No.*
9. Performing Organization Name and Address		*10. Work Unit No.* *11. Contract or Grant No.*
12. Sponsoring Agency Name and Address U.S. Department of Transportation National Highway Traffic Safety Administration 400 Seventh, S.W. Washington, D.C. 20590		*13. Type of Report and Period Covered* Final Report Dates *14. Sponsoring Agency Code*
15. Supplementary Notes Reviewed by _____ Program Manager Approved by _____		

16. Abstract

This report contains the results of tests performed in accordance with FMVSS 213, Child Restraint Systems, on the Manufacturer, Automobile, equipped with a Manufacturer Child Restraint. The child restraint appears to comply with all the requirements of FMVSS 213. Final determination of compliance is made by the National Highway Traffic Safety Administration.

17. Key Words FMVSS 213 Child Restraint Systems Compliance Testing		*18. Distribution Statement*	
19. Security Classify. (of this report) UNCLASSIFIED	*20. Security Classify. (of this page)* UNCLASSIFIED	*21. No. of Pages*	*22. Price*

APPENDIX D....Continued:

TABLE OF CONTENTS

Section 1 –	Purpose and Test Procedure
Section 2 –	Introduction and Summary
Section 3 –	Inspection and Test Data
Appendix A –	Equipment List and Calibration Schedules
Appendix B –	Photographs of Equipment

SECTION 1

PURPOSE AND TEST PROCEDURE

Purpose: The purpose of the test was to determine if the production built-in child restraint system(s) in the Manufacturer Automobile met the requirements of Federal Motor Vehicle Safety Standard (FMVSS) No. 213, Child Restraint Systems.

Test Procedure: The "Performing Organization Operating Test Procedure for FMVSS No. 213", submitted to and approved by the Office of Vehicle Safety Compliance, National Highway Traffic Safety Administration, contains the specific procedures used to conduct this test. This procedure shall not be interpreted to be in conflict with any portion of FMVSS No. 213 and amendments in effect as noted in the applicable contract.

SECTION 2

INTRODUCTION AND SUMMARY

This report presents all of the FMVSS 213 compliance inspection and test data obtained on the Manufacturer Child Seat - Type child restraint system. This test was performed in conjunction with a full-scale FMVSS 208 compliance test of a Automobile. The restraint was dynamically tested in the forward-facing upright configuration. The results from all inspections and tests indicate that the Manufacturer Child Seat - Type child restraint complied with all of the requirements of FMVSS 213.

Restraint system inspection and, full-scale dynamic testing were performed by the Performing Organization. Compliance test data sheets for all tests are found in Section 3 of this report.

APPENDIX D....Continued:

SECTION 3
INSPECTION AND TEST DATA
FMVSS 213 - BUILT-IN CHILD RESTRAINT SYSTEMS

Report No. 213-ABC-96-# _____

CHILD RESTRAINT SYSTEM IDENTIFICATION

Manufacturer:
Name _____
Addres _____
_____
_____

Model No. _____
Group No. _____

1. Item Code _____
   Date of Manufacture _____
   Sled Test No. _____

2. Item Code _____
   Date of Manufacture _____
   Sled Test No. _____

3. Item Code _____
   Date of Manufacture _____
   Sled Test No. _____

4. Item Code _____
   Date of Manufacture _____
   Sled Test No. _____

5. Item Code _____
   Date of Manufacture _____
   Sled Test No. _____

6. Item Code _____
   Date of Manufacture _____
   Sled Test No. _____

REMARKS:

Technician: _____ Date: _____

Program Manager: _____

APPENDIX D....Continued:

COMPLIANCE TEST DATA: FMVSS 213
LABELING (FMVSS 213, S5.5)

Date of Test _____ Item Code _____

_____

_____

_____

_____

_____

PASS / FAIL

S5.5.4 (a) Each built-in child restraint system other than a factory-installed built-in restraint shall be permanently labeled with the information specified in S5.5.5 (a) through (l). The information specified in S5.5.5 (a) through (j) and in S5.5.5(l) shall be visible when the system is activated for use. _____

(b) Each factory-installed built-in child restraint shall be permanently labeled with the information specified in S5.5.5 (f) through (j) and S5.5.5(l), so that the information is visible when the restraint is activated for use. The information shall also be included in the vehicle owner's manual. _____

S5.5.5 The information specified in paragraphs (a) through (l) of this section that is required by S5.5.4 shall be stated in the English language and lettered in letters and numbers that are not smaller than 10-point type and are on a contrasting background. _____

REMARKS:

Technician: _____ Date: _____

Program Manager: _____

APPENDIX D....Continued:

LABELING (Continued)

S5.5.5 (Continued) PASS/FAIL

The following information is included:

(a) The model name or number of the system. _____

(b) The manufacturer's name. A distributor's or dealer's name may be used instead if the distributor or dealer assumes all responsibility for all duties and liabilities imposed on the manufacturer with respect to the system by the National Traffic and Motor Vehicle Safety Act, as amended. _____

(c) The statement: "Manufactured in _____," inserting the month and year of manufacture. _____

(d) The place of manufacture (city and State, or foreign country). However, if the manufacturer uses the name of the distributor or dealer, then it shall state the location (city and State, or foreign country) of the principle offices of the distributor or dealer. _____

(e) The statement: "This child restraint system conforms to all applicable Federal Motor Vehicle Safety Standards." _____

REMARKS:

Technician: _____ Date: _____

Program Manager: _____

APPENDIX D....Continued:

LABELING (Continued) PASS/FAIL

(f) One of the following statements, inserting the manufacturers recommendations for the maximum weight and height of children who can safely occupy the system: _____

(1) THIS INFANT RESTRAINT IS DESIGNED FOR USE BY CHILDREN WHO WEIGH _____ POUNDS (MASS _____ KG) OR LESS AND WHOSE HEIGHT IS _____ INCHES (_____ MM) OR LESS ; or

(2) THIS CHILD RESTRAINT IS DESIGNED FOR USE ONLY BY CHILDREN WHO WEIGH BETWEEN _____ AND ____ POUNDS (MASS BETWEEN _____ AND_____ KG) AND WHOSE HEIGHT IS _____ INCHES (_____MM) OR LESS AND WHO ARE CAPABLE OF SITTING UPRIGHT ALONE ; or

(3) THIS CHILD RESTRAINT IS DESIGNED FOR USE ONLY BY CHILDREN WHO WEIGH BETWEEN ____ AND ____ POUNDS (MASS BETWEEN ____AND____ KG) AND ARE BETWEEN ____ AND ____ INCHES (____AND ____MM) IN HEIGHT.

(g) The statement specified in paragraph (1), and if appropriate, the statement in paragraph (2).

(1) WARNING! FAILURE TO FOLLOW THE MANUFACTURER'S INSTRUCTIONS ON THE USE OF THIS CHILD RESTRAINT SYSTEM CAN RESULT IN YOUR CHILD STRIKING THE VEHICLE'S INTERIOR DURING A SUDDEN STOP OR CRASH. _____

(2) In the case of each built-in child restraint system which is not intended for use in the motor vehicle at certain adjustment positions or under certain circumstances an appropriate statement of the manufacturer's restrictions regarding those positions or circumstances, in capitalized letters. _____

(h) In the case of each built-in child restraint system that has belts designed to restrain children using them, the statement: _____

SNUGLY ADJUST THE BELTS PROVIDED WITH THIS CHILD RESTRAINT AROUND YOUR CHILD.

APPENDIX D....Continued:

LABELING (Continued) PASS/FAIL

(i) In the case of each built-in child restraint system which can be used in a rear-facing position, the following statement:

PLACE AN INFANT IN A REAR-FACING POSITION IN THIS CHILD RESTRAINT. _____

(j) A diagram or diagrams showing the fully activated child restraint system in infant and/or child configurations. _____

(k) The following statement, inserting an address and telephone number: _____

"Child restraints could be recalled for safety reasons. You must register this restraint to be reached in a recall. Send your name, address and the restraint's model number and manufacturing date to (*insert address*) or call (*insert telephone number*). For recall information, call the U.S. Government's Auto Safety Hotline at 1-800-424-9393 (202-366-0123 in D.C. area)."

(l) In the case of a built-in belt-positioning seat that uses either the vehicles Type I or Type II belt systems or both, a statement describing the manufacturer's recommendations for the maximum height and weight of children who can safely occupy the system, and how the booster should be used (e.g.; with or without shield) with the different vehicle belt systems. _____

REMARKS:

Technician: _____ Date: _____

Program Manager: _____

APPENDIX D....Continued:

COMPLIANCE TEST DATA: FMVSS 213
INSTALLATION INSTRUCTIONS (FMVSS 213, S5.6)

Date of Test _____ Item Code _____

_____

_____

_____

_____

PASS/FAIL

S5.6.2

(a) Each built-in child restraint system shall be accompanied by printed instructions in the English that provide a step-by-step procedure, including diagrams, for activating the restraint system, positioning a child in the system, adjusting the restraint and, if provided, the restraint harness to fit the child. The instructions for each built-in car bed shall explain that the child should be positioned in the bed in such a way that the child's head is near the center of the vehicle. _____

(b) Each motor vehicle equipped with a factory-installed built-in child restraint shall have the information specified in paragraph (a) of this section included in it's vehicle owner's manual. _____

S5.6.2.1

The instructions shall explain the primary consequences of not following the manufacturer's warnings for proper use of the child restraint system in accordance with S5.5.5 (f) through (i). _____

S5.6.2.2

The instructions for each built-in child restraint system, other than a factory-installed restraint, shall include the following statement, inserting an address and telephone number: _____

(Continued on next page)

APPENDIX D....Continued:

"Child restraints could be recalled for safety reasons. You must register this restraint to be reached in a recall. Send your name, address and the restraint's model number and manufacturing date to (*insert address*) or call (*insert telephone number*). For recall information, call the U. S. Government's Auto Safety Hotline at 1-800-424-9393 (202-366-0123 in D.C. area)."

S5.6.2.3 PASS/FAIL

Each built-in child restraint system other than a factory-installed built-in restraint, shall have a location on the restraint for storing the instructions. _____

S5.6.3

Each built-in child restraint system, other than a system that has been installed in a vehicle or a factory-installed built-in system that is designed for a specific vehicle model and seating position, shall be accompanied by instructions in English that provide a step-by-step procedure for installing the system in a motor vehicle. The instructions shall specify the types of vehicles and the seating positions into which the restraint can or cannot be installed. The instructions for each car bed shall explain that the car bed should be installed so that the child's head will be near the center of the vehicle. _____

S5.6.4

In the case of a built-in belt-positioning seat that uses either the vehicle's Type I or Type II belt systems or both, the instructions shall include a statement describing the manufacturer's recommendations for the maximum height and weight of children who can safely occupy the system and how the booster must be used with the vehicle belt systems appropriate for the booster seat. The instructions shall explain the consequences of not following the directions. The instructions shall specify that, if the booster seat is recommended for use with only the lap-belt part of a Type II assembly, the shoulder belt portion of the assembly must be placed behind the child. _____

Technician: _____ Date: _____

Program Manager: _____

APPENDIX D....Continued:

REGISTRATION FORM (FMVSS 213, S5.8)

Date of Test _____ Item Code _____

_____

_____

_____

_____

PASS / FAIL

S5.8 Information requirements - REGISTRATION FORM.

(a) Each child restraint system, except a factory-installed built-in restraint system, shall have a registration form attached to any surface of the restraint that contacts the dummy when the dummy is positioned in the system in accordance with S6.1.2 of Standard 213. _____

(b) Each form shall:

(1) Consist of a postcard that is attached at a perforation to an informational card; _____

(2) Conform in size, content and format to Figures 9a and 9b of Standard 213; _____

(3) Have a thickness of at least 0.1778 mm (0.007 inches) and not more than 0.2413 mm (0.0095 inches). _____

(c) Each postcard shall provide the model name or number and date of manufacture (month, year) of the child restraint system to which the form is attached, shall contain space for the purchaser to record his or her name and mailing address, shall be addressed to the manufacturer, and shall be postage paid. No other information shall appear on the postcard, except identifying information that distinguishes a particular child restraint system from other systems of that model name or number may be preprinted in the shaded area of the postcard, as shown in Figure 9a of Standard 213. _____

Technician: _____ Date: _____

Program Manager: _____

APPENDIX D....Continued:

MINIMUM HEAD SUPPORT SURFACE (FMVSS 213, S5.2.1)

Date of Test _____ Item Code _____

_____

_____

_____

_____

_____

S5.2.1.2 The child restraint system is too low to be exempt from this requirement.

_____
YES/NO

S5.2.1.1

BACK SUPPORT HEIGHT

Maximum Child Weight kg (lbs.)	Required Minimum Height cm (in.)	Measured Height cm (in.)	PASS/ FAIL

BACK SUPPORT WIDTH

Required Minimum Width cm (in.)	Measured Width cm (in.)	Side Wing Depth cm (in.)	PASS/ FAIL

REMARKS:

Technician: _____ Date: _____

Program Manager: _____

APPENDIX D....Continued:

TORSO IMPACT PROTECTION (FMVSS 213, S5.2.2)

Date of Test _____ Item Code _____

_____

S5.2.2.1

Test	Compliance Requirement	Test Result	PASS/ FAIL
Back Support Surface	Flat or concave		
	Area ≥ 548 sq. cm (85 sq. in.)	sq. cm (sq. in.)	
Side Support Surface	Flat or concave		
Max. weight ≥ 9 kg (20 lb.)	Area ≥ 155 sq. cm (24 sq. in.)	sq. cm (sq. in.)	
Max. weight < 9 kg (20 lb.)	Area ≥ 310 sq. cm (48 sq. in.)	sq. cm (sq. in.)	
Forward Restraining Surface Horiz. Cross Section	Flat or concave		
Vertical Longitudinal	Flat or convex		
Cross Section	Radius of curvature ≥ 5 cm (2 in.)		

YES/NO PASS/DEFERRED

S5.2.2.2 Forward Fixed or Movable Surface _____ _____

REMARKS:

Technician: _____ Date: _____

Program Manager: _____

APPENDIX D....Continued:

PROTRUSION LIMITATION (FMVSS 213, S5.2.4)

Date of Test _____ Item Code _____

_____

Test	Compliance Requirement mm (in.)	Test Result mm (in.)	PASS/ FAIL
Height	≤ 9.53 mm (3/8 in.)		
Edge Radius	≥ 6.35 mm (1/4 in.)		

REMARKS:

Technician: _____ Date: _____

Program Manager: _____

APPENDIX D....Continued:

DYNAMIC IMPACT TEST CONDITIONS (FMVSS 213, S6.1)

Date of Test _____ Test No. _____

Item Code _____

Laboratory Ambient Conditions During Testing

Temperature Range _____ to _____ Degrees C (F)

Relative Humidity Range _____ % to _____ %

Test Device _____

Nominal velocity (km/h) [mph] _____

Dummy Used _____ S/N: _____

Child Restraint System

Location _____

Installation mode _____

Adjustment mode _____

"Misuse" mode _____

Test Results

Actual velocity _____ m/s (ft/s)

_____ km/h (mph)

Vehicle Seat Position

Vertical position _____

Horizontal position _____

Vehicle seat back position _____

Include pretest and post test photographs and acceleration-time history plot.

REMARKS:

Pretest and posttest photographs are presented in Appendix B.

Technician: _____ Date: _____

Program Manager: _____

APPENDIX D....Continued:

Date of Test _____ Test No. _____

_____ Item Code _____

"SLED PULSE"

FMVSS 213 30 MPH PULSE ENVELOPE

APPENDIX D....Continued:

BELT RESTRAINT (FMVSS 213, S5.4.3)

Date of Test _____ Test No. _____

Item Code _____

PASS/FAIL

S5.4.3.1 Snug Fit of Belts

EXTRA WEBBING

Dummy	Each Shoulder Belt cm (in.)	Each Lap Belt Side cm (in.)	Crotch Belt cm (in.)

S5.4.3.2 Direct Restraint Belts _____

YES/NO

(1) Belt / dummy contact for _____

(2) Rigid structure behind _____

(3) Belt / child restraint slip _____

Note: If all "yes", restraint fails.

S5.4.3.3 Seating System Belts and/or Shields _____

(1) Upper torso _____

(2) Lower torso _____

(3) Crotch restraint _____

S5.4.3.4 Child Harness Belts _____

(1) Upper torso _____

(2) Lower torso _____

(3) Prevent standing _____

REMARKS:

Technician: _____ Date: _____

Program Manager: _____

APPENDIX D....Continued:

BUCKLE RELEASE (FMVSS 213, S5.4.3.5, S6.2)

Date of Test _____ Test No. _____

Item Code _____

Test	Compliance Requirement	Test Result	PASS/ FAIL
Buckle Minimum Surface Area	Area ≥ 3.9 cm² (0.6 in.²)	cm² (in.²)	
Preimpact Release Force	Force range: 40 to 62 N (9 to 14 lbs.)	N (lbs.)	
Buckle Integrity	Not release during test		
Post Impact Release Force	Force range: ≤ 71 N (16 lbs.)	N (lbs.)	

REMARKS:

The buckle is an integral part of the seat and, therefore, the buckle release test was performed on the entire seat assembly.

Technician: _____ Date: _____

Program Manager: _____

APPENDIX D....Continued:

RESTRAINT SYSTEM INTEGRITY (FMVSS 213, S5.1.1)

Date of Test _____ Test No. _____

Item Code _____

Test	Compliance Requirement	Test Result	PASS/ FAIL
Structural Integrity	No complete separation		
	No partial separation with exposed edge radius < 9.53 mm (1/4")		
	No partial separation with protrusions > 6.35 mm (3/8")		
Adjustment Position	No change		
Back Surface / Seating Surface Angle	Not < 45 degrees	deg.	

REMARKS:

Technician: _____ Date: _____

Program Manager: _____

APPENDIX D....Continued:

INJURY CRITERIA (FMVSS 213, S5.1.2)

Date of Test _____ Test No. _____

Item Code _____

Test	Compliance Requirement	Test Result	PASS/ FAIL
Head Injury Criterion	$\leq$ 1000		
Chest Injury Criterion	Cumulative duration over 60 g $\leq$ 3 ms	Peak g = Duration exceeding 60 g = _____	

REMARKS:

Technician: _____ Date: _____

Program Manager: _____

APPENDIX D....Continued:

OCCUPANT EXCURSION (FMVSS 213, S5.1.3, S5.1.4, S5.2.1.1 (C))

Date of Test _____ Test No. _____

Item Code _____

FORWARD-FACING RESTRAINTS

Test	Compliance Requirement	Test Result	PASS/ FAIL
Torso Retention (FMVSS 213, S5.1.3.1)	Retain within system		
Knee Target Excursion (FMVSS 213, S5.1.3.1)	≤ 91.5 cm (36 in.)	cm (in.)	
Head - Torso Angle (FMVSS 213, S5.2.1.1 (c))	Rearward change ≤ 45 degrees	deg.	

REAR-FACING RESTRAINTS

Test	Compliance Requirement	Test Result	PASS/ FAIL
Torso Retention (FMVSS 213, S5.1.3.2)	Retain within system		
Head Target Excursion (FMVSS 213, S5.1.3.2)	Not beyond restraint's top and forward edge		
Back Support Angle (FMVSS 213, S5.1.4)	≤ 70 degrees	deg.	
Head - Torso Angle (FMVSS 213 S5.2.1.1 (c))	Rearward change ≤ 45 degrees	deg.	

REMARKS:

Technician: _____ Date: _____

Program Manager: _____

APPENDIX D....Continued:

APPENDIX A
EQUIPMENT LIST AND CALIBRATION SCHEDULES

APPENDIX B
PHOTOGRAPHS OF EQUIPMENT