REVISION RECORD			
REV	DESCRIPTION	DATE	BY
A	ADDED SUPPORT ARM DETAIL, CHANGED CASTER (ITEM 13) WAS McMASTER-CARR #242724T41, CHANGED T-HANDLE (ITEM #12) WAS 5/16"ø X 1.8" McMASTER-CAR #98700A258, CHANGED SPRING PIN (ITEM #8) WAS McMASTER-CAR #91598A252	4/8/02	DW
B	CHANGED SEAT BELT ATTACHMENT, (3/8"ø HEX HD. BOLT, ITEM #17) TO 3/8"ø QUICK-RELEASE PIN, CHANGED QUANTITY OF ITEM #18 (3/8" HEX NUT) FROM 4 TO 2, ADDED "OR EQUAL" TO ALL McMASTER-CARR PART NUMBERS	11/25/02	DW

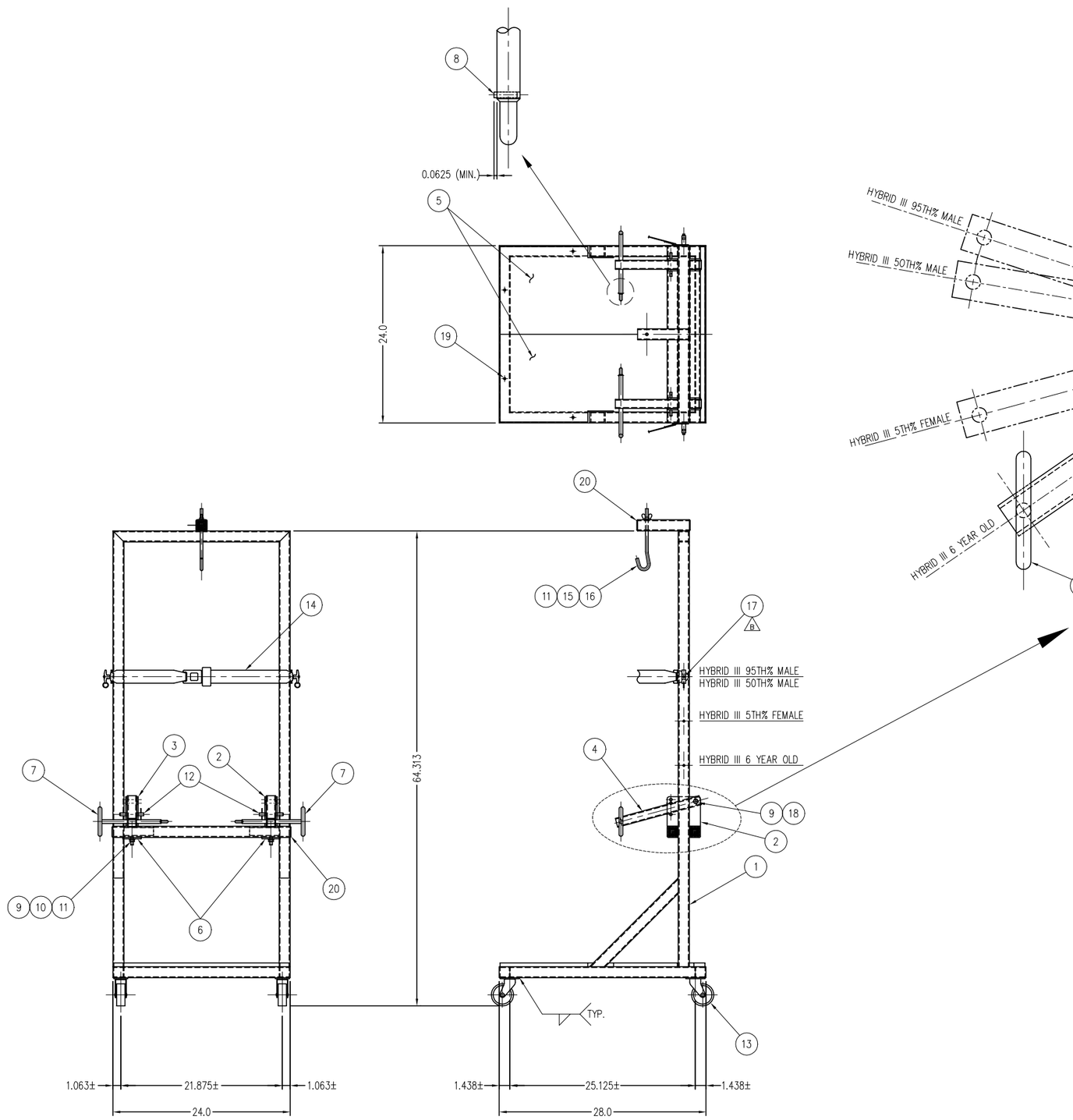

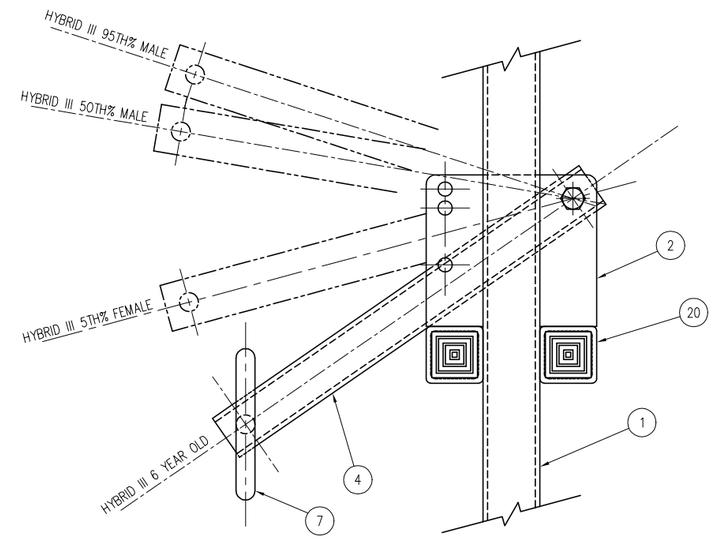

SUPPORT ARM DETAIL
SCALE: 6"=1'-0 A

	ITEM NO.	QTY.	PART NO.	DESCRIPTION	MATERIAL
	20	6		PLASTIC FINISHING PLUG – CAPLUGS PART #FP-241 (OPTIONAL)	POLYETHYLENE
	19	6		PHILLIPS, FLAT HEAD SELF TAPPING SCREW #8 x 1" LG.	ZINC PLATED
B	18	2		HEX LOCK NUT 3/8-16	ZINC PLATED
B	17	2		PUSH-BUTTON QUICK RELEASE PIN 3/8"ø x 1 1/2" LG., McMASTER-CARR PART #90293A312 OR EQUAL	
	16	1		STANDARD WING NUT 3/8-16	ZINC PLATED
B	15	1		STEEL HOOK BOLT 3/8-16 x 8 5/16" LG. McMASTER-CARR PART #9492T15 OR EQUAL	ZINC PLATED
	14	1		SEAT BELT, A.S.C.P. PART #A2081-60 OR EQUAL	
B A	13	4		SWIVEL CASTER – McMASTER-CARR PART #20135T12 OR EQUAL	
B A	12	2		T-HANDLE SELF LOCKING PIN 3/8"ø x 2.0" McMASTER-CARR PART #97320A380 OR EQUAL	
	11	3		3/8 FLAT WASHER	
	10	2		HEX NUT 3/8 – 16	
	9	4		HEX HD. BOLT 3/8 – 16 x 2 1/2" LG.	
B A	8	2		SPRING PIN 1/8"ø x 1/2"-McMASTER-CARR PART #90692A177 OR EQUAL	
	7	2	DL100-080	SUPPORT ROD ASSEMBLY	
	6	2	DL100-075	WASHER PLATE	
	5	2	DL100-070	DUMMY CART BASE	
	4	2	DL100-065	DUMMY SUPPORT ARM	
	3	1	DL100-060-2	DUMMY SUPPORT ARM BRACKET ASSEMBLY – RIGHT	
	2	1	DL100-060-1	DUMMY SUPPORT ARM BRACKET ASSEMBLY – LEFT	
	1	1	DL100-051	DUMMY CART FRAME ASSEMBLY	

UNITS ARE in

TOLERANCES ARE: *

DECIMALS
.X ±0.1
.XX ±0.01
.XXX ±0.005
* unless otherwise noted

ANGLES
± 0.5°

MATERIAL:
SCALE 1 1/2" = 1'-0

APPROVALS	DATE
DRAWN D. WALKER	11/16/2001
CHECKED J. McFADDEN	12/11/2002
ENG	

NATIONAL HIGHWAY TRAFFIC SAFETY ADMINISTRATION

ATD STORAGE CART ASSEMBLY

ATD STORAGE CART

SIZE D | DRAWING NUMBER DL100-050 | REV B

REVISION RECORD			
REV	DESCRIPTION	DATE	BY

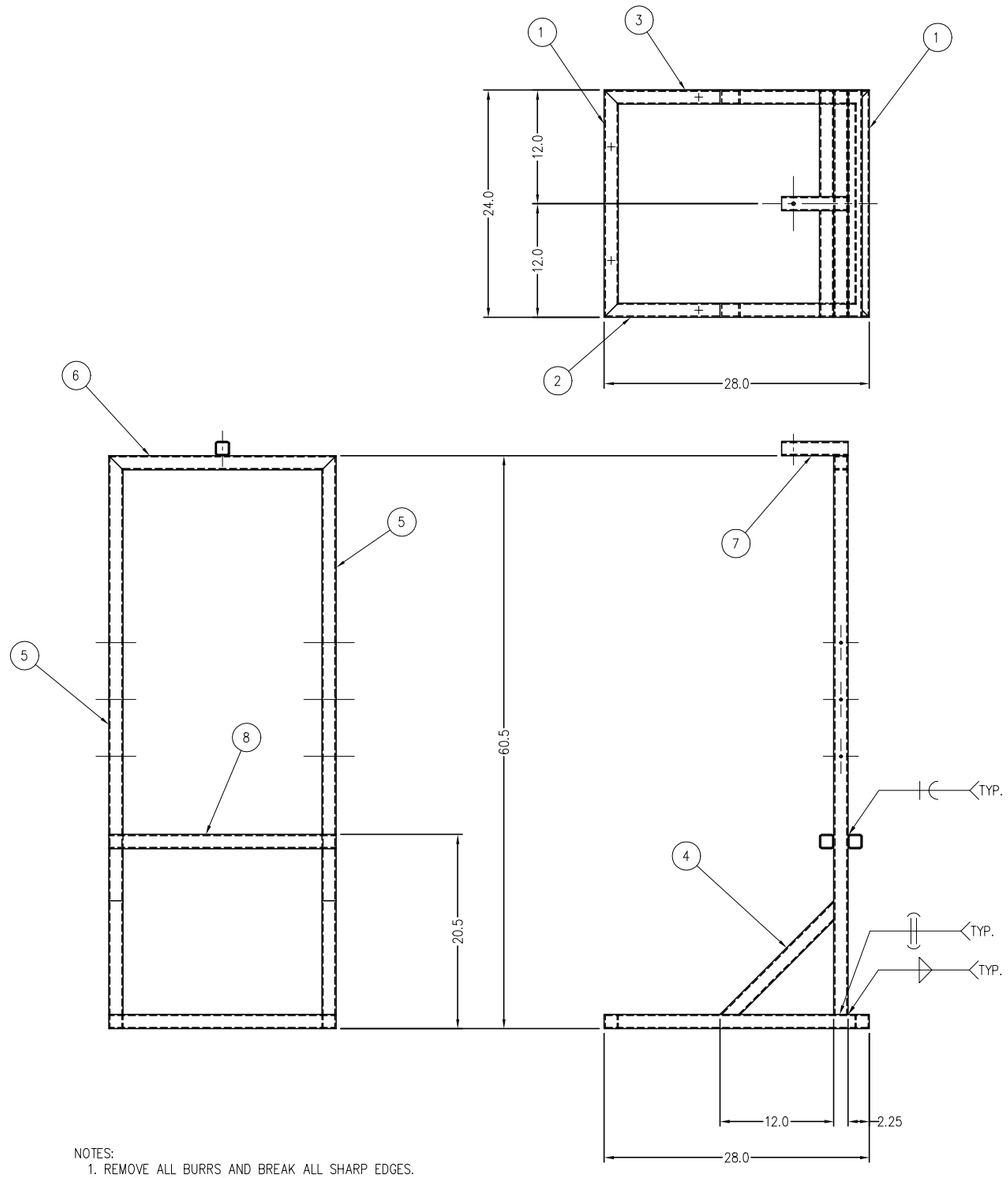

NOTES:
1. REMOVE ALL BURRS AND BREAK ALL SHARP EDGES.
2. PAINT BLACK ENAMEL

ITEM NO.	QTY.	PART NO.	DESCRIPTION	MATERIAL
8	2		T.S. 1 1/2 x 1 1/2 x 11 GA. x 24" LG.	A-513
7	1	DL100-057	HANGER MEMBER	
6	1	DL100-056	FRAME CROSS MEMBER	
5	2	DL100-055	FRAME UPRIGHT MEMBER	
4	2	DL100-054	FRAME BRACE MEMBER	
3	1	DL100-053-2	FRAME BASE SIDE MEMBER - RIGHT	
2	1	DL100-053-1	FRAME BASE SIDE MEMBER - LEFT	
1	2	DL100-052	FRAME BASE MEMBER	

NEXT ASSY.	QTY.	USED ON
DL100-050	1	DL100-050

APPLICATION

UNITS ARE in

TOLERANCES ARE: *

DECIMALS
.X ±0.1
.XX ±0.01
.XXX ±0.005

ANGLES
± 0.5°

* unless otherwise noted

MATERIAL:

SCALE 1 1/2" = 1'-0

APPROVALS	DATE
DRAWN D. WALKER	11/20/2001
CHECKED J. McFADDEN	12/11/2002
ENG	

NATIONAL HIGHWAY TRAFFIC SAFETY ADMINISTRATION

ATD STORAGE CART, FRAME ASSEMBLY

ATD STORAGE CART

SIZE D

DRAWING NUMBER DL100-051

REV

REVISION RECORD			
REV	DESCRIPTION	DATE	BY

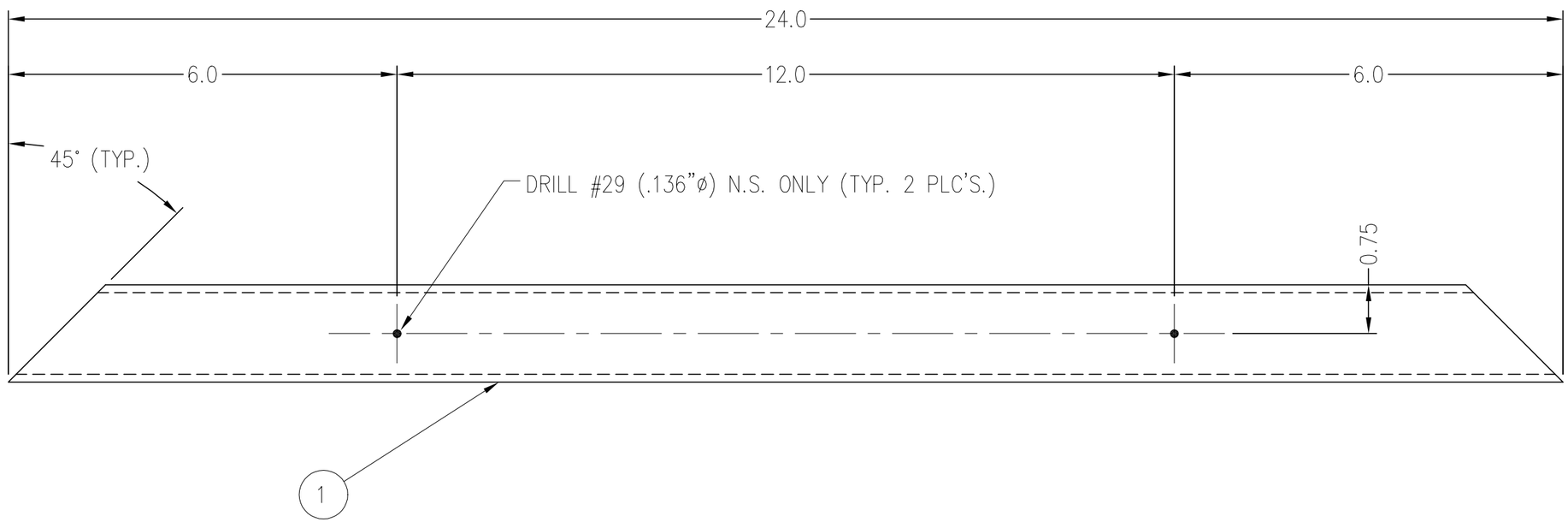

NOTES:
1. REMOVE ALL BURRS AND BREAK ALL SHARP EDGES.

ITEM NO.	QTY.	PART NO.	DESCRIPTION	MATERIAL
1	1		T.S. 1 1/2 x 1 1/2 x 11GA. X 24"	A-513

NEXT ASSY.	QTY.	USED ON
DL100-051	2	DL100-050

APPLICATION

UNITS ARE in

TOLERANCES ARE: *

DECIMALS
.X ±0.1
.XX ±0.01
.XXX ±0.005

ANGLES
± 0.5°

* unless otherwise noted

MATERIAL: A-513
SCALE 1=2

APPROVALS	DATE
DRAWN D. WALKER	11/20/2001
CHECKED J. McFADDEN	12/11/2002
ENG	

NATIONAL HIGHWAY TRAFFIC SAFETY ADMINISTRATION

FRAME BASE MEMBER

ATD STORAGE CART

SIZE B | DRAWING NUMBER DL100-052 | REV

REVISION RECORD			
REV	DESCRIPTION	DATE	BY

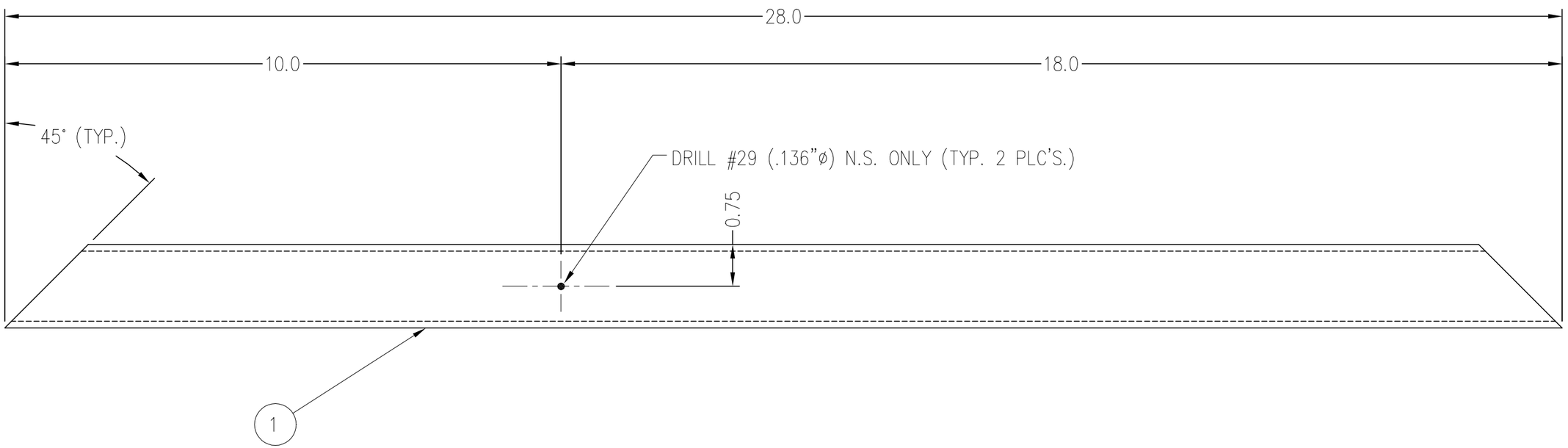

NOTES:
1 LEFT SHOWN (DL100-053-1)
RIGHT OPPOSITE (DL100-053-2)
2. REMOVE ALL BURRS AND BREAK ALL SHARP EDGES.

NEXT ASSY.	QTY.	USED ON
DL100-053-2	DL100-051	1	DL100-050
DL100-053-1	DL100-051	1	DL100-050

APPLICATION

ITEM NO.	QTY.	PART NO.	DESCRIPTION	MATERIAL
1	1		T.S. 1 1/2 x 1 1/2 x 11GA. X 28"	A-513

UNITS ARE in

TOLERANCES ARE: *

DECIMALS
.X ±0.1
.XX ±0.01
.XXX ±0.005

ANGLES
± 0.5°

* unless otherwise noted

MATERIAL: A-513
SCALE 1=2

APPROVALS	DATE
DRAWN D. WALKER	11/20/2001
CHECKED J. McFADDEN	12/11/2002
ENG	

NATIONAL HIGHWAY TRAFFIC SAFETY ADMINISTRATION

FRAME BASE SIDE MEMBER

ATD STORAGE CART

SIZE B | DRAWING NUMBER DL100-053-1&2 | REV

REVISION RECORD			
REV	DESCRIPTION	DATE	BY

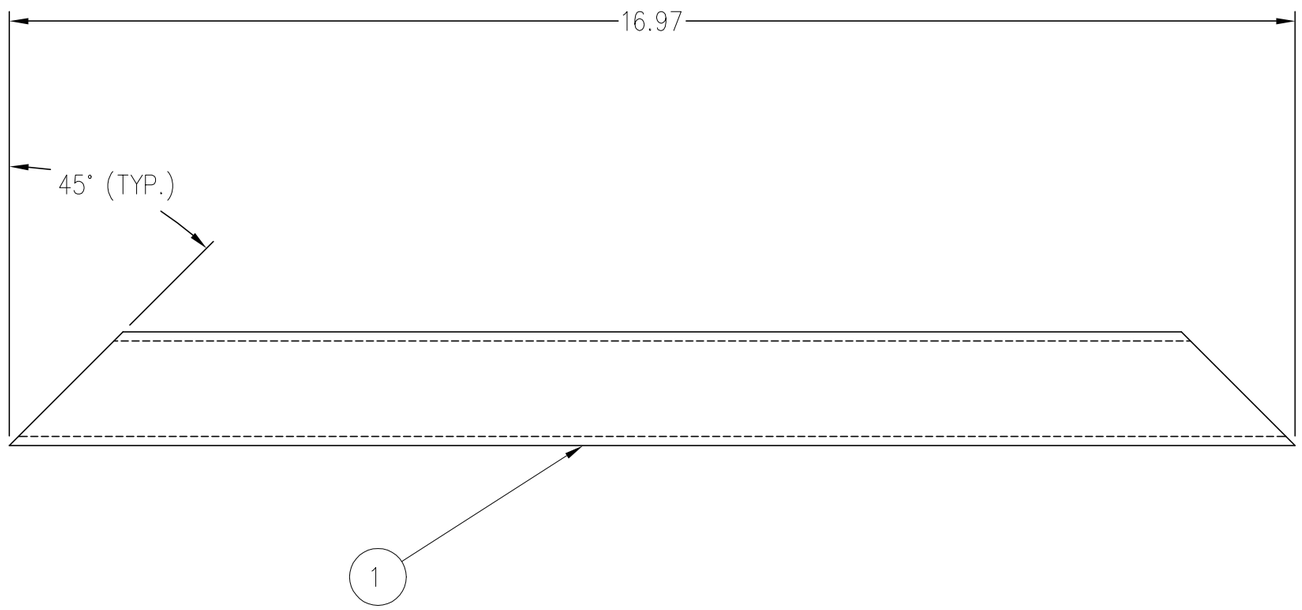

NOTES:
1. REMOVE ALL BURRS AND BREAK ALL SHARP EDGES.

ITEM NO.	QTY.	PART NO.	DESCRIPTION	MATERIAL
1	1		T.S. 1 1/2 x 1 1/2 x 11GA. X 16.97"	A-513

NEXT ASSY.	QTY.	USED ON
DL100-051	2	DL100-050

APPLICATION

UNITS ARE in

TOLERANCES ARE: *

DECIMALS
.X ±0.1
.XX ±0.01
.XXX ±0.005

ANGLES
± 0.5°

* unless otherwise noted

MATERIAL: A-513
SCALE 1=2

APPROVALS	DATE
DRAWN D. WALKER	11/21/2001
CHECKED J. McFADDEN	12/11/2002
ENG	

NATIONAL HIGHWAY TRAFFIC SAFETY ADMINISTRATION

FRAME BRACE MEMBER

ATD STORAGE CART

SIZE B | DRAWING NUMBER DL100-054 | REV

REVISION RECORD			
REV	DESCRIPTION	DATE	BY
A	ADDED HOLES	4/8/02	DW
B	CHANGED HOLE DIAMETER FROM 7/16" TO Z (0.413"ø)	11/25/02	DW

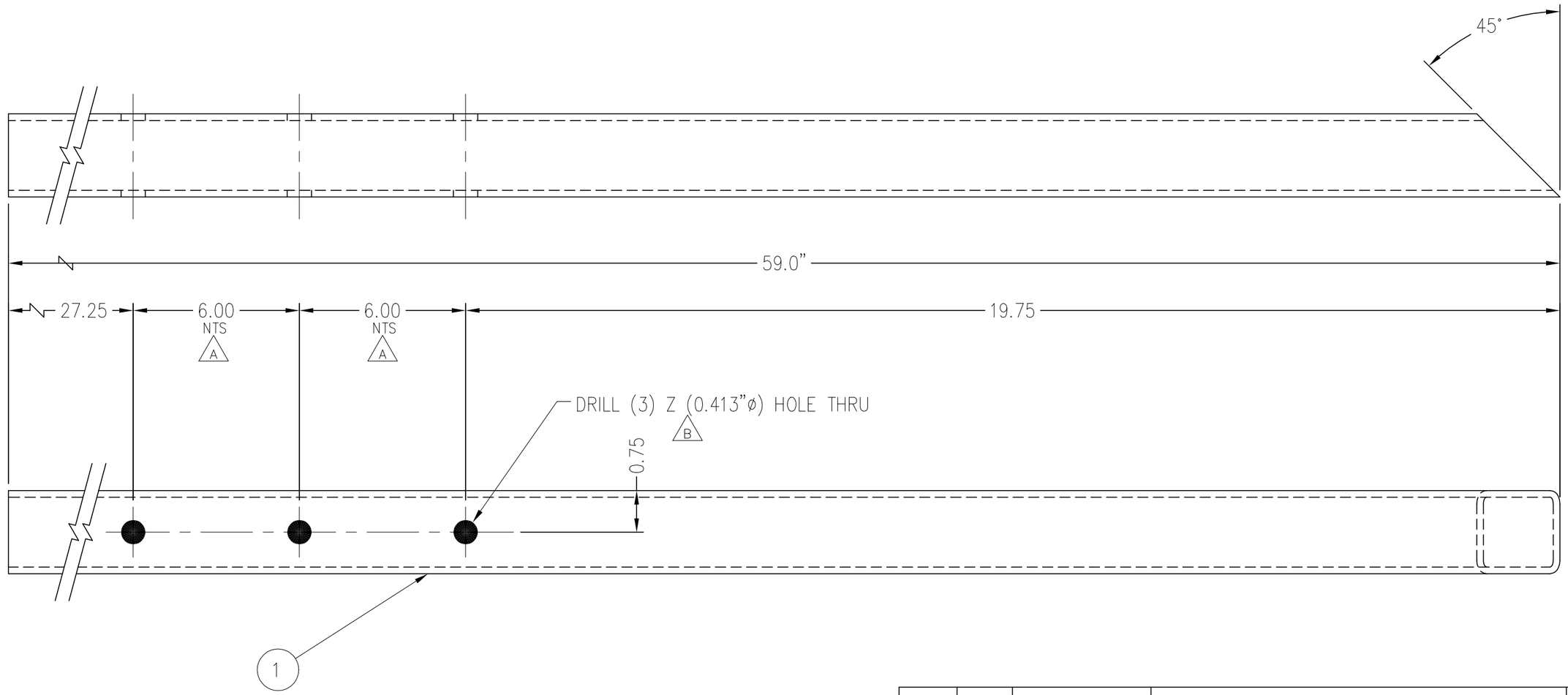

NOTES:
1. REMOVE ALL BURRS AND BREAK ALL SHARP EDGES.

ITEM NO.	QTY.	PART NO.	DESCRIPTION	MATERIAL
1	1		T.S. 1 1/2 x 1 1/2 x 11GA. X 59"	A-513

NEXT ASSY.	QTY.	USED ON
DL100-051	2	DL100-050

APPLICATION

UNITS ARE in

TOLERANCES ARE: *

DECIMALS
.X ±0.1
.XX ±0.01
.XXX ±0.005

ANGLES
± 0.5°

* unless otherwise noted

MATERIAL: A513
SCALE 1=2

APPROVALS	DATE
DRAWN D. WALKER	11/21/2001
CHECKED J. McFADDEN	12/11/2002
ENG	

NATIONAL HIGHWAY TRAFFIC SAFETY ADMINISTRATION

FRAME UPRIGHT MEMBER

ATD STORAGE CART

SIZE B | DRAWING NUMBER DL100-055 | REV B

REVISION RECORD			
REV	DESCRIPTION	DATE	BY

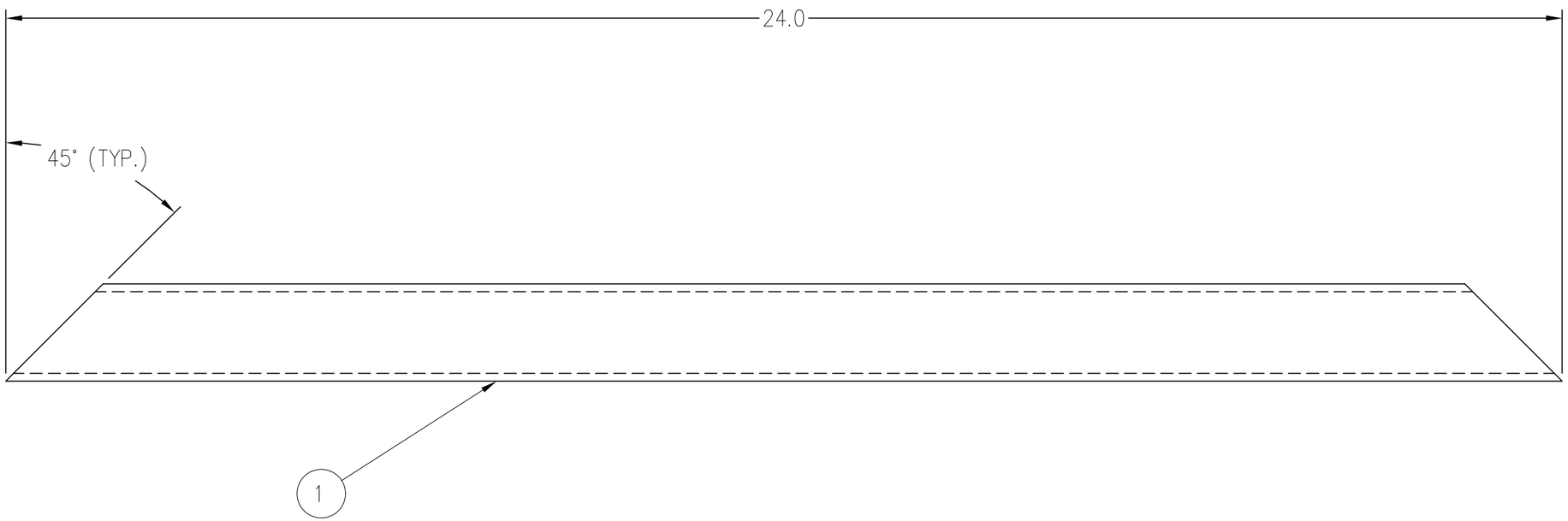

NOTES:
1 REMOVE ALL BURRS AND BREAK ALL SHARP EDGES.

ITEM NO.	QTY.	PART NO.	DESCRIPTION	MATERIAL
1	1		T.S. 1 1/2 x 1 1/2 x 11GA. X 24"	A-513

NEXT ASSY.	QTY.	USED ON
DL100-051	1	DL100-050

APPLICATION

UNITS ARE in

TOLERANCES ARE: *

DECIMALS
.X ±0.1
.XX ±0.01
.XXX ±0.005

ANGLES
± 0.5°

* unless otherwise noted

MATERIAL: A-513
SCALE 1=2

APPROVALS	DATE
DRAWN D. WALKER	11/21/2001
CHECKED J. McFADDEN	12/11/2002
ENG	

NATIONAL HIGHWAY TRAFFIC SAFETY ADMINISTRATION

FRAME CROSS MEMBER

ATD STORAGE CART

SIZE B | DRAWING NUMBER DL100-056 | REV

REVISION RECORD			
REV	DESCRIPTION	DATE	BY

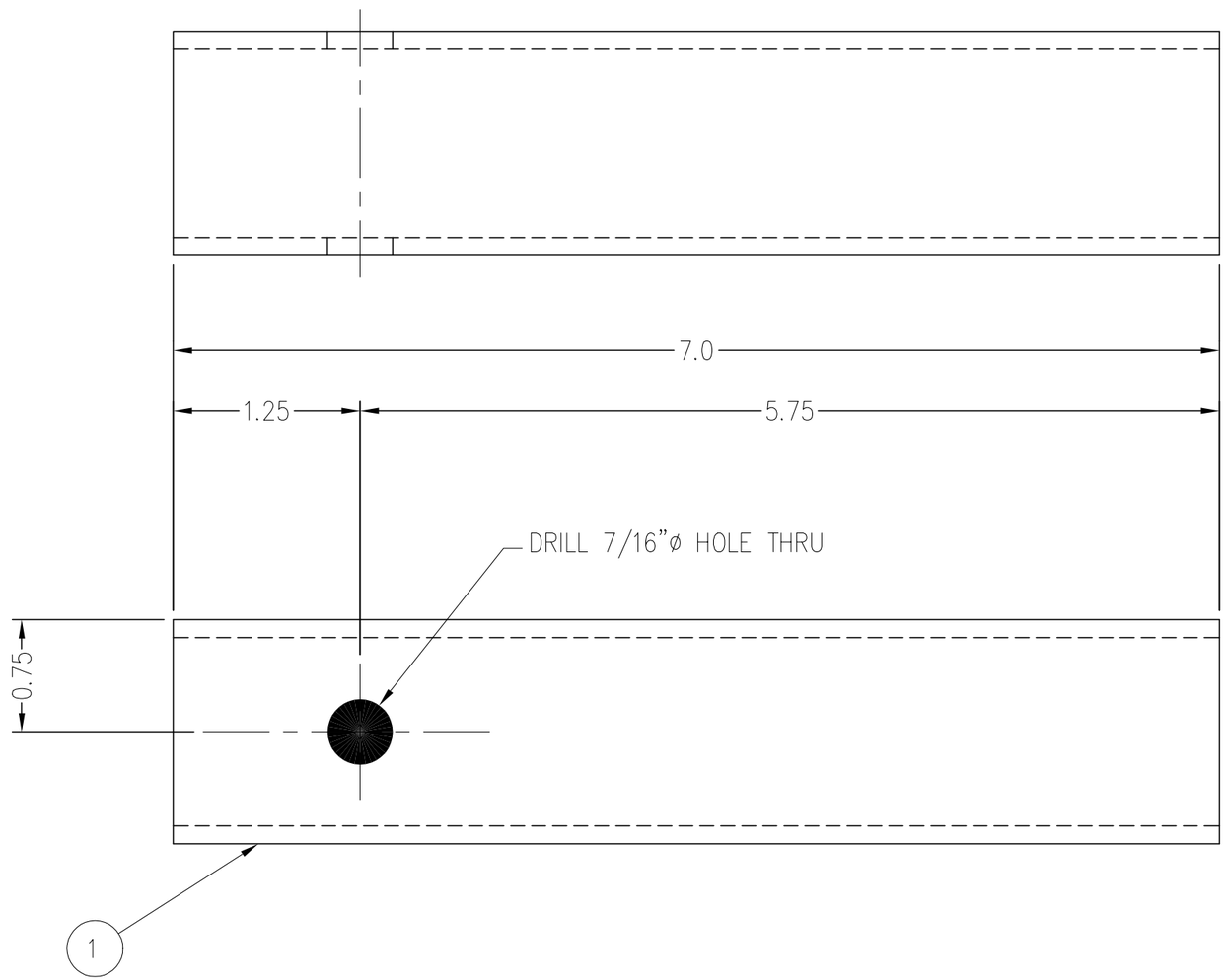

NOTES:
1. REMOVE ALL BURRS AND BREAK ALL SHARP EDGES.

ITEM NO.	QTY.	PART NO.	DESCRIPTION	MATERIAL
1	1		T.S. 1 1/2 x 1 1/2 x 11GA. X 7"	A-513

NEXT ASSY.	QTY.	USED ON
DL100-051	1	DL100-050

APPLICATION

UNITS ARE in

TOLERANCES ARE: *

DECIMALS
.X ±0.1
.XX ±0.01
.XXX ±0.005

ANGLES
± 0.5°

* unless otherwise noted

MATERIAL: A513
SCALE 1=1

APPROVALS	DATE
DRAWN D. WALKER	11/21/2001
CHECKED J. McFADDEN	12/11/2002
ENG	

NATIONAL HIGHWAY TRAFFIC SAFETY ADMINISTRATION

HANGER MEMBER

ATD STORAGE CART

SIZE B | DRAWING NUMBER DL100-057 | REV

REVISION RECORD			
REV	DESCRIPTION	DATE	BY
A	CORRECTED DIMENSION WAS 1.0	4/8/02	DW

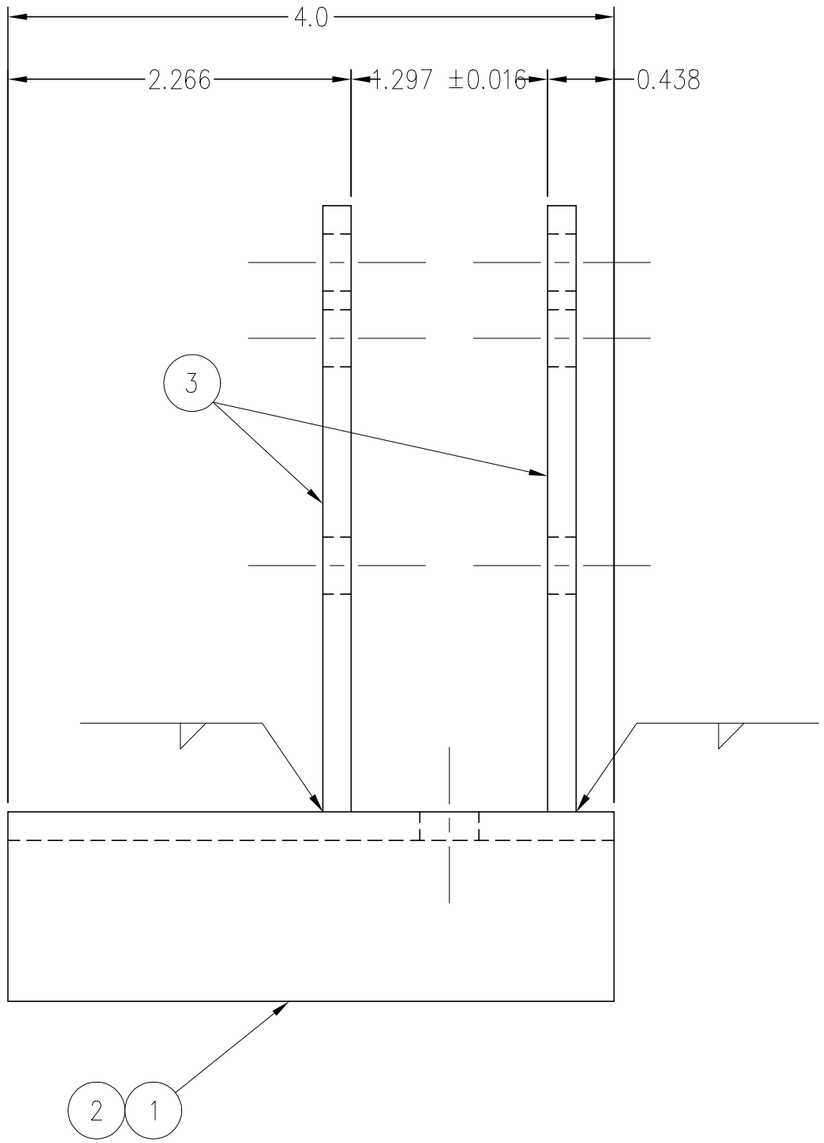

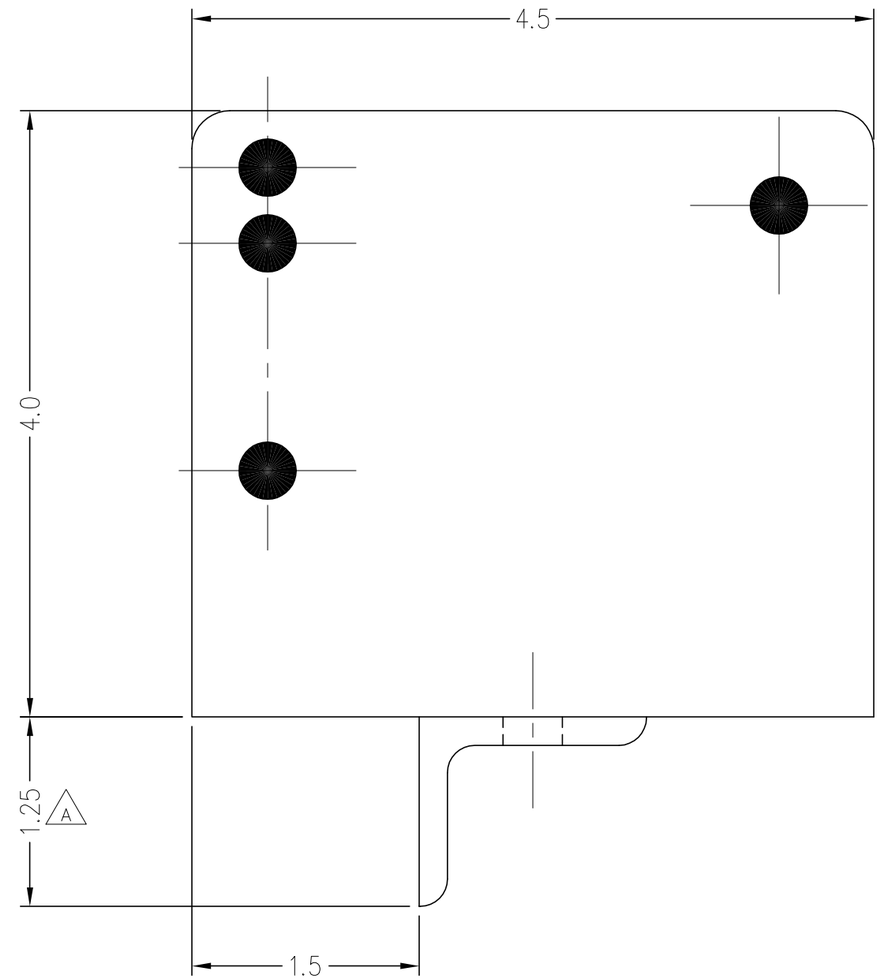

ITEM NO.	QTY.	PART NO.	DESCRIPTION	MATERIAL
3	4	DL100-062	SUPPORT BRACKET - PLATE	
2	1	DL100-061-2	SUPPORT BRACKET - ANGLE - RIGHT (NOT SHOWN)	
1	1	DL100-061-1	SUPPORT BRACKET - ANGLE - LEFT	

NOTES:

1 LEFT SHOWN (DL100-060-1)
RIGHT OPPOSITE (DL100-060-2)
2. REMOVE ALL BURRS AND BREAK ALL SHARP EDGES.
3. PAINT BLACK ENAMEL

APPLICATION			
	NEXT ASSY.	QTY.	USED ON
DL100-060-2	DL100-050	1	DL100-050
DL100-060-1	DL100-050	1	DL100-050

UNITS ARE in

TOLERANCES ARE: *

DECIMALS
.X ±0.1
.XX ±0.01
.XXX ±0.005

ANGLES
± 0.5°

* unless otherwise noted

MATERIAL:

SCALE 1=1

APPROVALS	DATE
DRAWN D. WALKER	11/21/2001
CHECKED J. McFADDEN	12/11/2002
ENG	

NATIONAL HIGHWAY TRAFFIC SAFETY ADMINISTRATION

DUMMY SUPPORT ARM BRACKET ASSEMBLY

ATD STORAGE CART

SIZE B | DRAWING NUMBER DL100-060-1&2 | REV A

REVISION RECORD			
REV	DESCRIPTION	DATE	BY
A	CORRECTED DIMENSION, WAS 1.0	4/9/02	DW

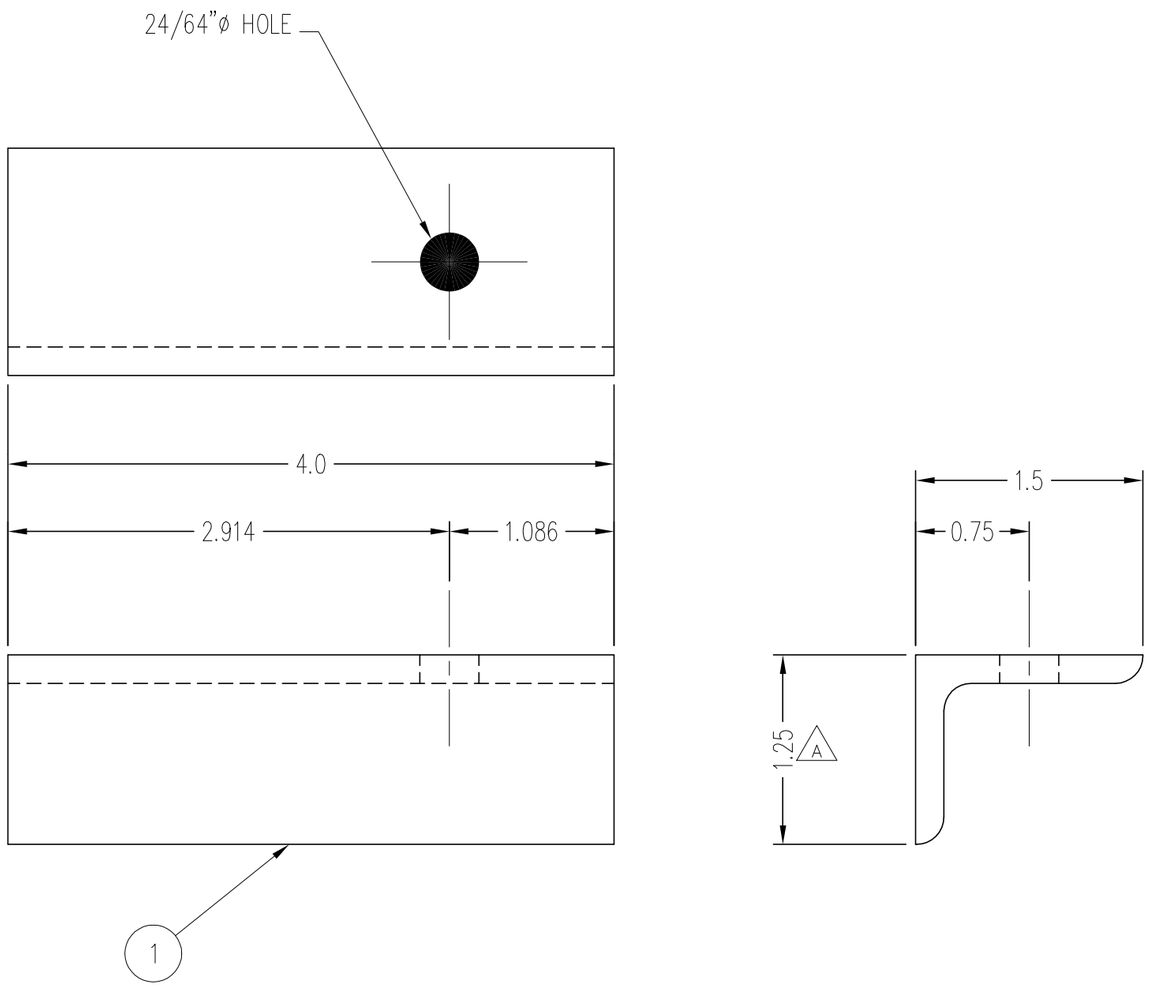

NOTES:
1 LEFT SHOWN (DL100-061-1)
RIGHT OPPOSITE (DL100-061-2)
2. REMOVE ALL BURRS AND BREAK ALL SHARP EDGES.

ITEM NO.	QTY.	PART NO.	DESCRIPTION	MATERIAL
1	1		L1 1/2 x 1 1/4 x 3/16 x 4" LG.	A-36

APPLICATION			
NEXT ASSY.	QTY.	USED ON	
DL100-061-2	DL100-060-2	1	DL100-050
DL100-061-1	DL100-060-1	1	DL100-050

UNITS ARE in

TOLERANCES ARE: *

DECIMALS
.X ±0.1
.XX ±0.01
.XXX ±0.005

ANGLES
± 0.5°

* unless otherwise noted

MATERIAL:

SCALE 1=1

APPROVALS	DATE
DRAWN D. WALKER	11/21/2001
CHECKED J. McFADDEN	12/11/2002
ENG	

NATIONAL HIGHWAY TRAFFIC SAFETY ADMINISTRATION

DUMMY SUPPORT BRACKET – ANGLE

ATD STORAGE CART

SIZE B | DRAWING NUMBER DL100-061-1&2 | REV A

REVISION RECORD			
REV	DESCRIPTION	DATE	BY
A	CHANGED HOLE SIZE, WAS V(.377"ø)	4/9/02	DW

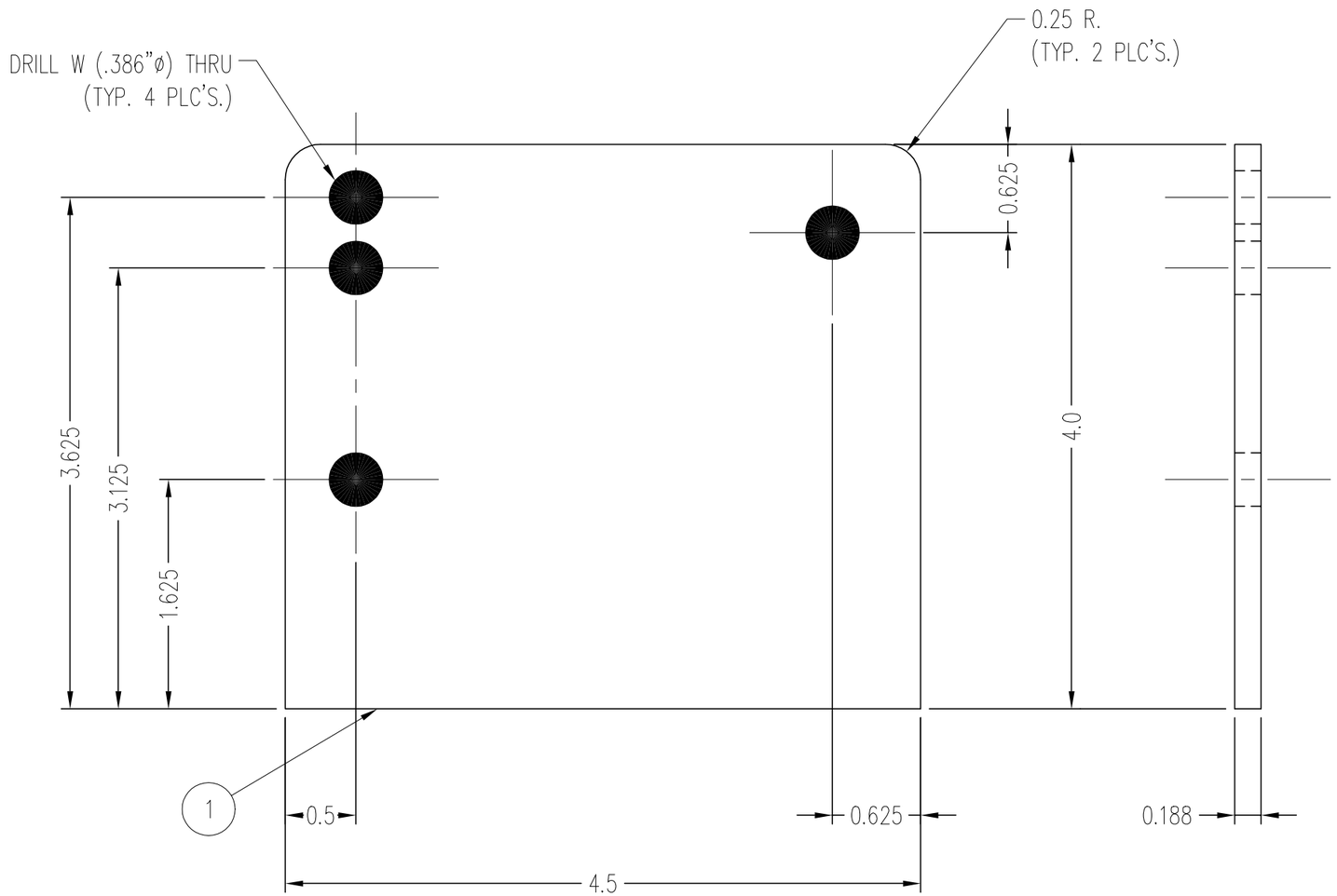

NOTES:
1. REMOVE ALL BURRS AND BREAK ALL SHARP EDGES.

ITEM NO.	QTY.	PART NO.	DESCRIPTION	MATERIAL
1	1		BAR 4 x 3/16 x 4 1/2	A-36

NEXT ASSY.	QTY.	USED ON
DL100-060-2	2	DL100-050
DL100-060-1	2	DL100-050

APPLICATION

UNITS ARE in

TOLERANCES ARE: *

DECIMALS
.X ±0.1
.XX ±0.01
.XXX ±0.005

ANGLES
± 0.5°

* unless otherwise noted

MATERIAL:

SCALE 1=1

APPROVALS	DATE
DRAWN D. WALKER	11/21/2001
CHECKED J. McFADDEN	12/11/2002
ENG	

NATIONAL HIGHWAY TRAFFIC SAFETY ADMINISTRATION

DUMMY SUPPORT BRACKET – PLATE

ATD STORAGE CART

SIZE	DRAWING NUMBER	REV
B	DL100-062	A

REVISION RECORD			
REV	DESCRIPTION	DATE	BY

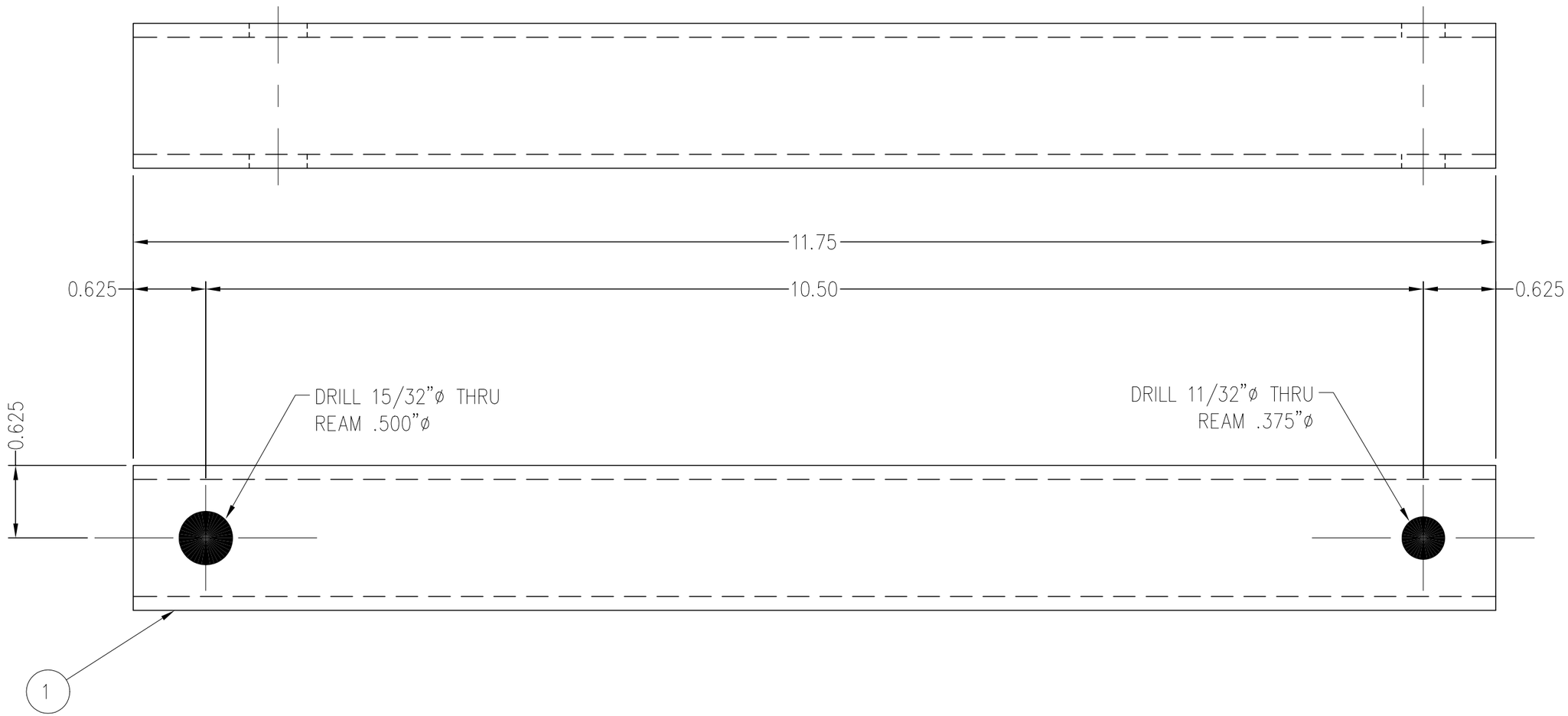

NOTES:
1. REMOVE ALL BURRS AND BREAK ALL SHARP EDGES.
2. PAINT BLACK ENAMEL

ITEM NO.	QTY.	PART NO.	DESCRIPTION	MATERIAL
1	1		T.S. 1 1/4 x 1 1/4 x 11GA. X 11 3/4"	A-513

NEXT ASSY.	QTY.	USED ON
DL100-050	2	DL100-050

APPLICATION

UNITS ARE in

TOLERANCES ARE: *

DECIMALS
.X ±0.1
.XX ±0.01
.XXX ±0.005

ANGLES
± 0.5°

* unless otherwise noted

MATERIAL: A513
SCALE 1=1

APPROVALS	DATE
DRAWN D. WALKER	11/26/2001
CHECKED J. McFADDEN	12/11/2002
ENG	

NATIONAL HIGHWAY TRAFFIC SAFETY ADMINISTRATION

DUMMY SUPPORT ARM

ATD STORAGE CART

SIZE B | DRAWING NUMBER DL100-065 | REV

REVISION RECORD			
REV	DESCRIPTION	DATE	BY

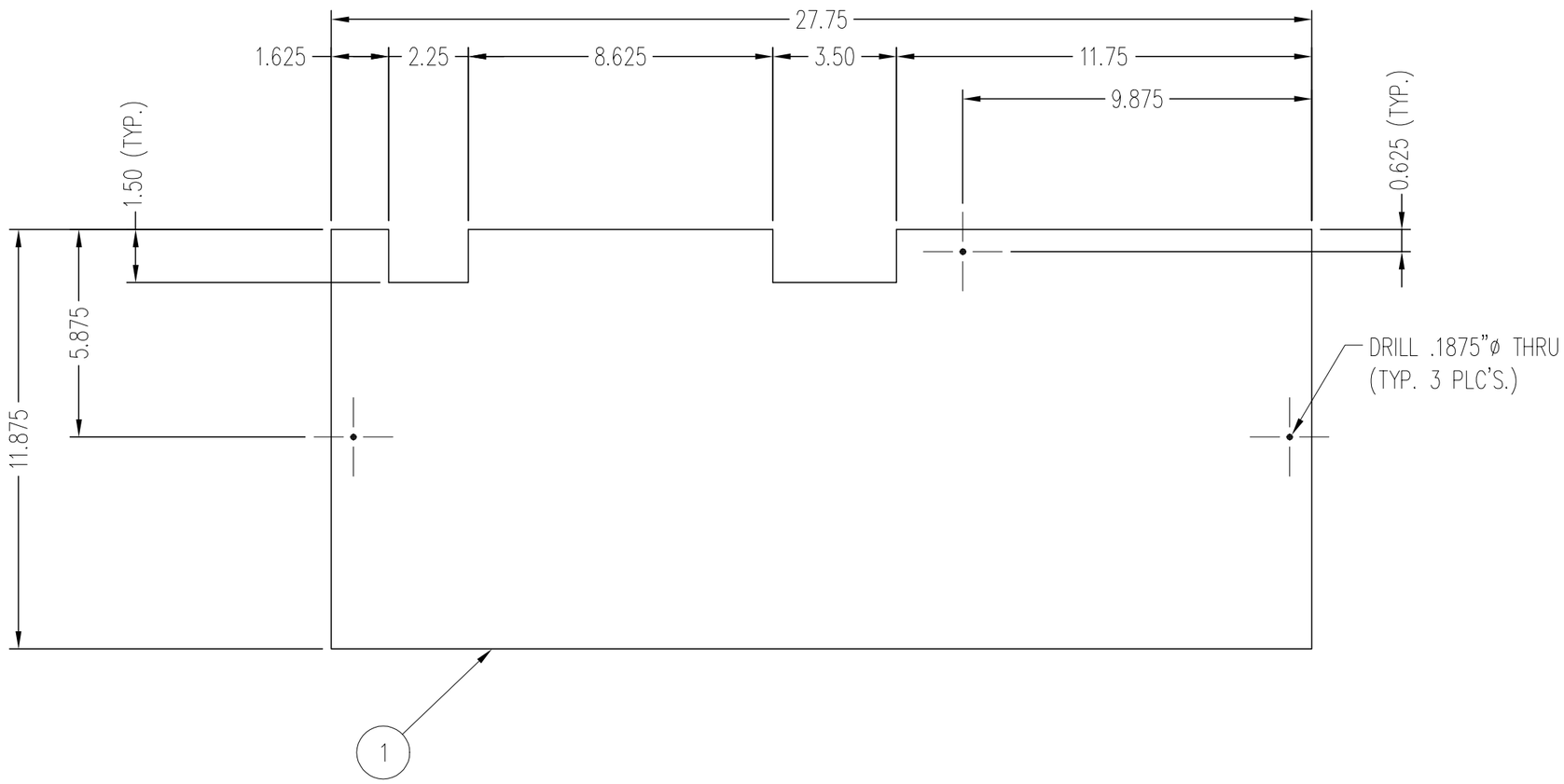

NOTES:
1. PAINT BLACK ENAMEL

ITEM NO.	QTY.	PART NO.	DESCRIPTION	MATERIAL
1	1		PLYWOOD 1/2" x 11 7/8" x 27 3/4"	PLYWOOD

NEXT ASSY.	QTY.	USED ON
DLAB100-050	2	DLAB100-050

APPLICATION

UNITS ARE in

TOLERANCES ARE: *

DECIMALS
.X ±0.1
.XX ±0.01
.XXX ±0.005

ANGLES
± 0.5°

* unless otherwise noted

MATERIAL: PLYWOOD
SCALE 3"=1'-0"

APPROVALS	DATE
DRAWN D. WALKER	11/26/2001
CHECKED J. McFADDEN	12/11/2002
ENG	

NATIONAL HIGHWAY TRAFFIC SAFETY ADMINISTRATION

DUMMY CART BASE

ATD STORAGE CART

SIZE B | DRAWING NUMBER DLAB100-070 | REV

REVISION RECORD			
REV	DESCRIPTION	DATE	BY

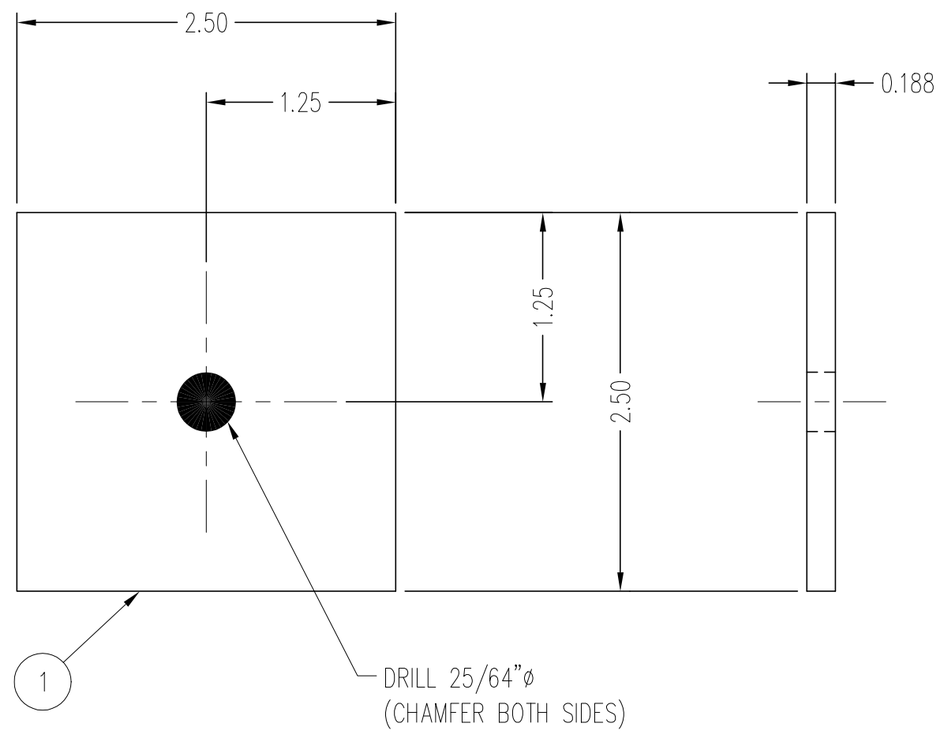

NOTES:
1. REMOVE ALL BURRS AND BREAK ALL SHARP EDGES.
2. PAINT BLACK ENAMEL

ITEM NO.	QTY.	PART NO.	DESCRIPTION	MATERIAL
1	1		BAR 2 1/2 x 3/16 x 2 1/2	A-36

NEXT ASSY.	QTY.	USED ON
DLAB100-050	2	DLAB100-050

APPLICATION

UNITS ARE in

TOLERANCES ARE: *

DECIMALS
.X ±0.1
.XX ±0.01
.XXX ±0.005

ANGLES
± 0.5°

* unless otherwise noted

MATERIAL: H.R. STEEL

SCALE 1=1

APPROVALS	DATE
DRAWN D. WALKER	11/26/2001
CHECKED J. McFADDEN	12/11/2002
ENG	

NATIONAL HIGHWAY TRAFFIC SAFETY ADMINISTRATION

WASHER PLATE

ATD STORAGE CART

SIZE B

DRAWING NUMBER DLAB100-075

REV

REVISION RECORD			
REV	DESCRIPTION	DATE	BY

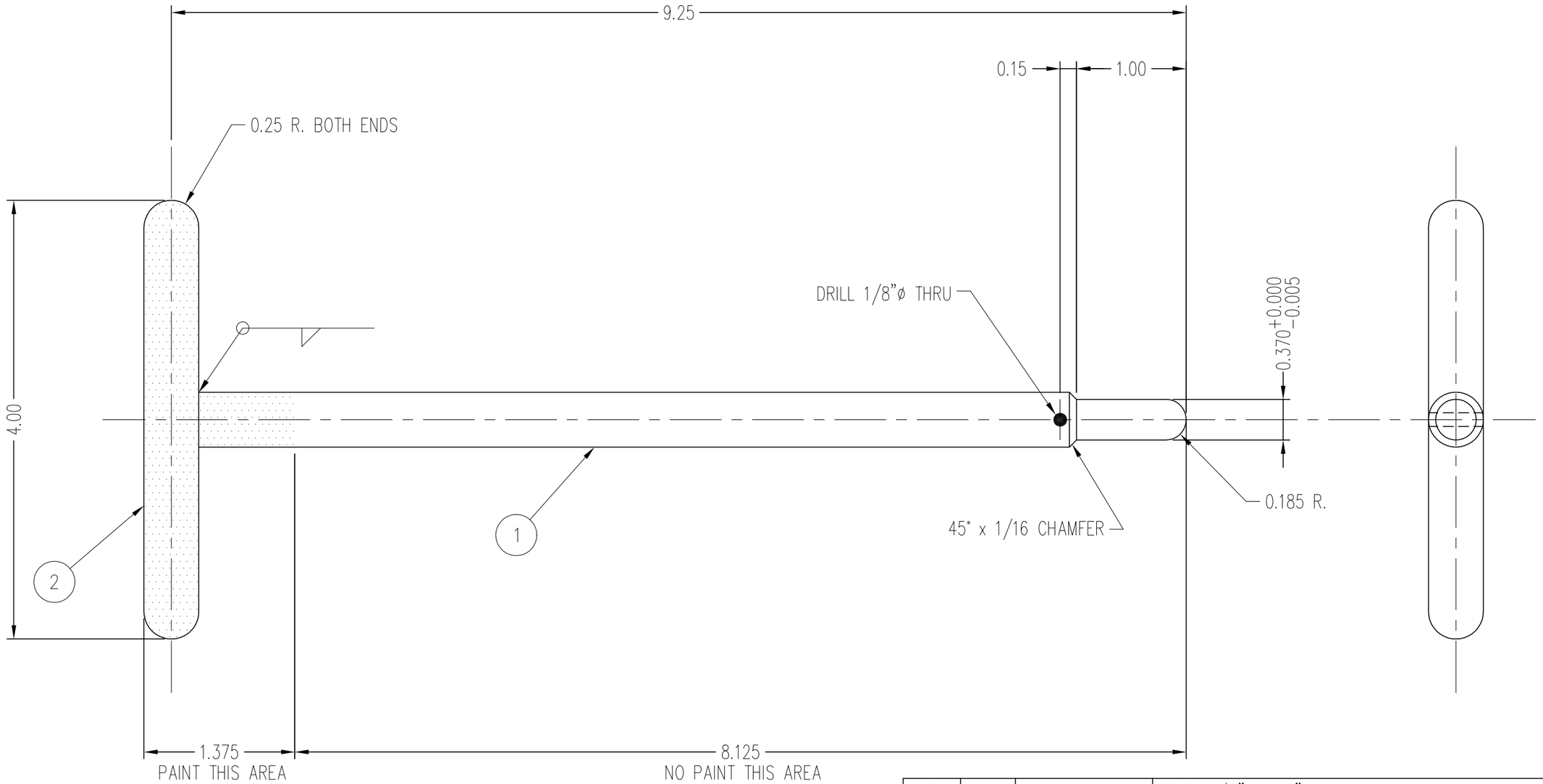

NOTES:
1. REMOVE ALL BURRS AND BREAK ALL SHARP EDGES.
2. PAINT BLACK ENAMEL (AS NOTED)

ITEM NO.	QTY.	PART NO.	DESCRIPTION	MATERIAL
2	1		BAR 1/2"ø x 4"	1018
1	1		BAR 1/2"ø x 9"	1018

NEXT ASSY.	QTY.	USED ON
DLAB100-050	2	DLAB100-050

APPLICATION

UNITS ARE in

TOLERANCES ARE: *

DECIMALS
.X ±0.1
.XX ±0.01
.XXX ±0.005

ANGLES
± 0.5°

* unless otherwise noted

MATERIAL: 1018 C.R. STEEL

SCALE 1=1

APPROVALS	DATE
DRAWN D. WALKER	11/26/2001
CHECKED J. McFADDEN	12/11/2002
ENG	

NATIONAL HIGHWAY TRAFFIC SAFETY ADMINISTRATION

SUPPORT ROD ASSEMBLY

ATD STORAGE CART

SIZE B

DRAWING NUMBER DLAB100-080

REV