FORM – SRP
Rev. 01/24/07

# SEAT REFERENCE POINT (SRP) AND TORSO ANGLE DATA

FMVSS No. 201, 202, 203, 207, 210 & 216
(All dimensions in inches)

Model Year: _____/ Make: _____/ Model: _____

Body Style: _____/ Seat Style: _____

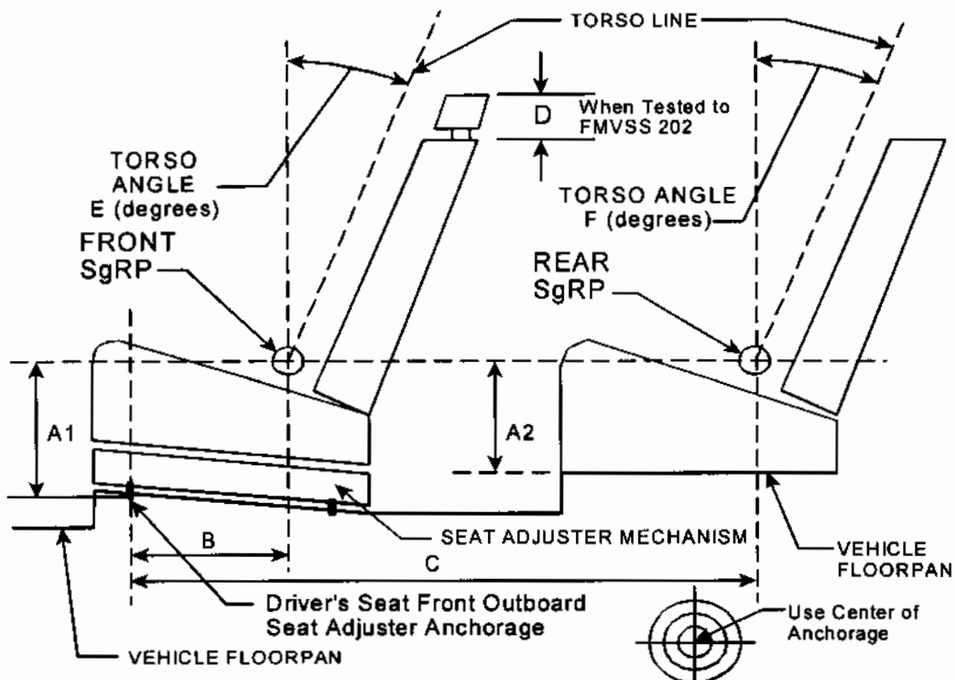


LEFT SIDE VIEW OF TEST VEHICLE

| DIMENSION | FRONT, A1 | REAR, A2 |
|---|---|---|
| A | | |
| B | | |
| C | | |
| D | | |
| E | _____ E | |
| F | _____ E | |

# SEATING REFERENCE POINT (SRP) AND TORSO ANGLE DATA

FMVSS No. 201, 202, 203, 207 & 210

(All dimensions in inches)

Model Year: _____/ Make: _____/ Model: _____

Body Style: _____/ Seat Style: _____

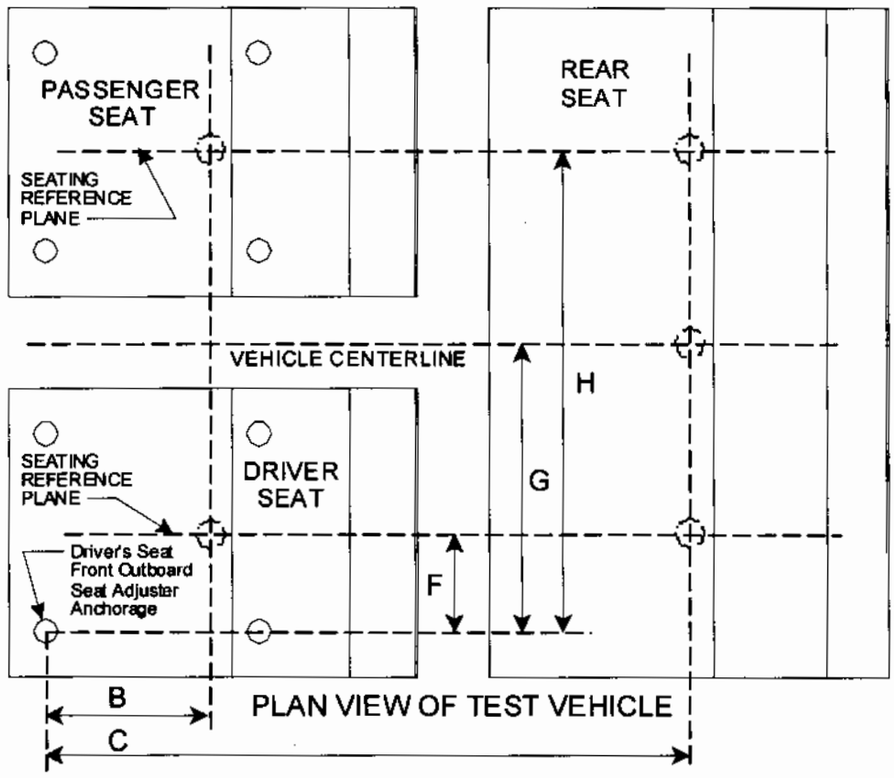


| | |
|---|---|
| B | |
| C | |
| F* | |
| G | |
| H* | |

* Provide all dimensions needed to locate SRP.

# TEST VEHICLE SEAT INFORMATION

FMVSS No. 201, 202, 203, 207 & 210
(All dimensions in inches)

Model Year: _____/ Make: _____/ Model: _____

Body Style: _____/ Seat Style: _____

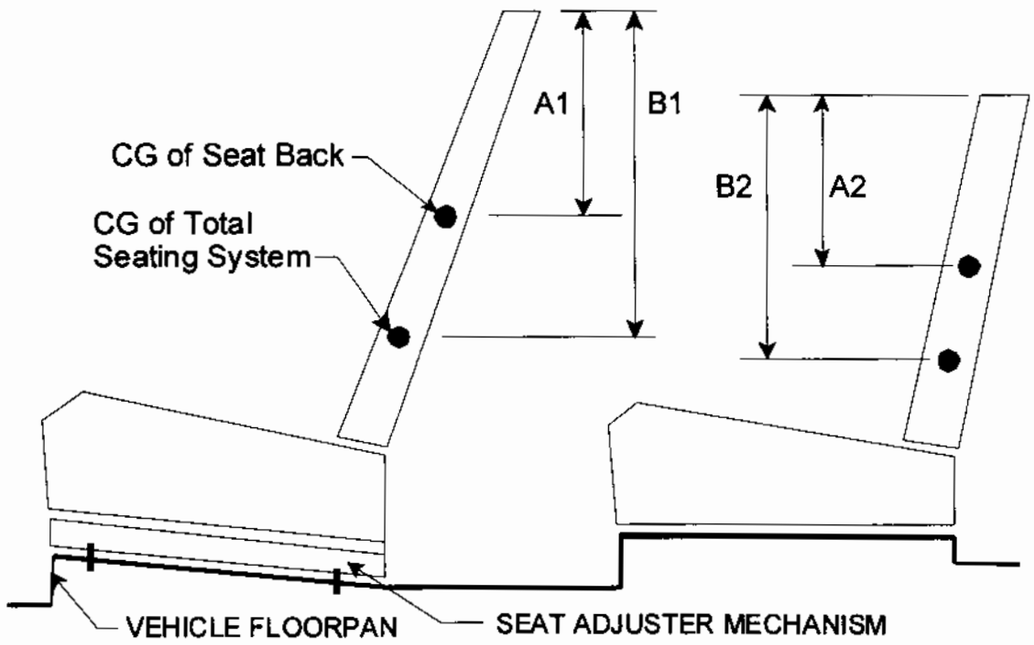


| | | | FRONT | BACK |
|---|---|---|---|---|
| A1 | | | | |
| B1 | | Weight of Hinged or Folding portion of seat | | |
| A2 | | Weight of Total Seat System | | |
| B2 | | Angle of Seat Back | | |

# SEATING REFERENCE POINT (SRP) AND TORSO ANGLE DATA

FMVSS No. 201, 202, 203, 207 & 210

(All dimensions in inches)

Model Year: _____/ Make: _____/ Model: _____

Body Style: _____/ Seat Style: _____

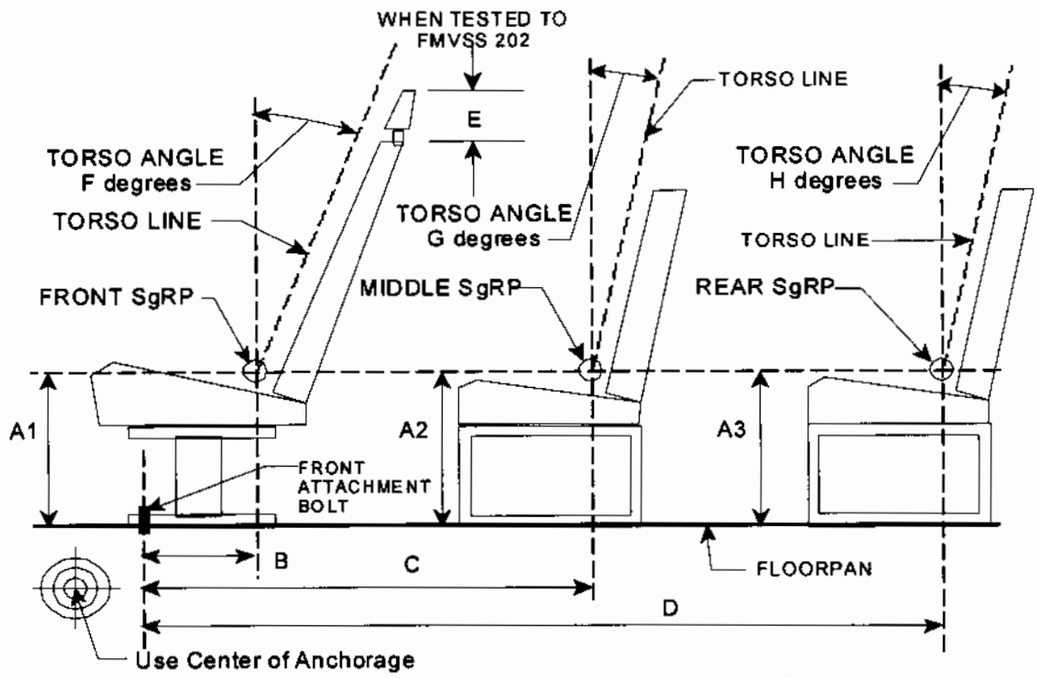


LEFT SIDE VIEW OF TEST VEHICLE

| DIMENSION | FRONT, A1 | MIDDLE, A2 | REAR, A3 |
|---|---|---|---|
| A | | | |
| B | | | |
| C | | | |
| D | | | |
| E | | | |
| F | | | |
| G | | | |
| H | | | |

# SEATING REFERENCE POINT (SRP) AND TORSO ANGLE DATA

FMVSS No. 201, 202, 203, 207 & 210

(All dimensions in inches)

Model Year: _____/ Make: _____/ Model: _____

Body Style: _____/ Seat Style: _____

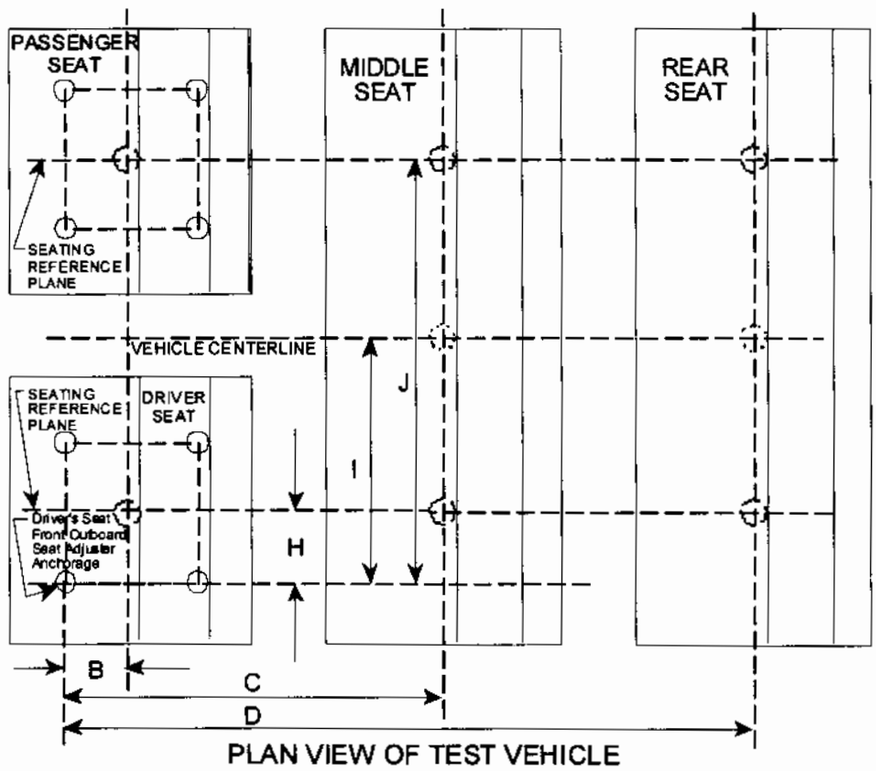


PLAN VIEW OF TEST VEHICLE

| | |
|---|---|
| B | |
| C | |
| D | |
| H* | |
| I* | |
| J* | |

* Provide all dimensions needed to locate SRP.

# TEST VEHICLE SEAT INFORMATION

FMVSS No. 201, 202, 203, 207 & 210
(All dimensions in inches)

Model Year: _____/ Make: _____/ Model: _____

Body Style: _____/ Seat Style: _____

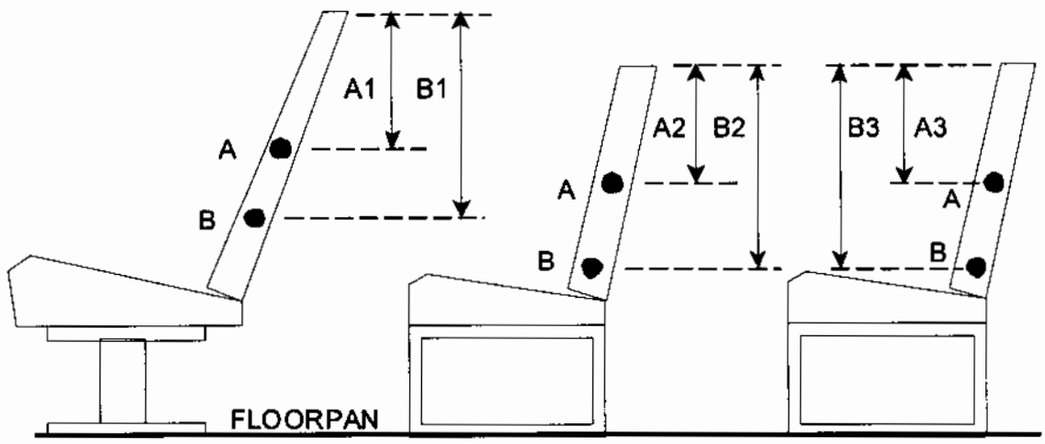


LEFT SIDE VIEW OF VEHICLE

Note: A: CG of Seat Back
B: CG of total seating system

| | | | FRONT | BACK |
|---|---|---|---|---|
| A1 | | | | |
| B1 | | Weight of Hinged or Folding portion of seat | | |
| A2 | | Weight of Total Seat System | | |
| B2 | | Angle of Seat Back | | |
| A3 | | REMARKS: | | |
| B3 | | | | |