01-022-N11B-7000

HONDA
AMERICAN HONDA MOTOR CO., INC.
1919 Torrance Boulevard • Torrance, CA 90501-2746
(310) 783-2000

October 8, 1998 AHCERT-983534

Administrator
National Highway Traffic Safety Administration
400 Seventh Street, S.W.
Washington, D.C. 20590

3p.

FILE

ATTENTION: V.I.N. Coordinator

Dear Administrator:

In accordance with 49 CFR, Part 565.5, Vehicle Identification Number-Content Requirements, Section 565.5(b), we are enclosing information specified in the regulation that is applicable for the following 1999 model year automobile(s).

HONDA: Civic Sedan GX

Yours truly,

AMERICAN HONDA MOTOR CO., INC.

William R. Willen
Managing Counsel
Product Legal Group

WRW/llw

Enclosure(s)

1

INFORMATION ON CFR PART 565 – VEHICLE IDENTIFICATION NUMBER

– 1999 HONDA PASSENGER CAR –

Issued : October 2, 1998

1. VEHICLE DETAIL AND THE VIN

Type : Passenger car Make : HONDA Model year : 1999

No.	Model	Trans-mission	GVWR Class	VIN (Example)
1	CIVIC SEDAN GX	4A/T	B	1HGEN164*XL000001

Note * : Check digit input 4A/T : 4 Speed Automatic

2. CONSTRUCTION OF VEHICLE IDENTIFICATION NUMBER

	1st sec.			2nd sec.					3rd sec	4th sec.							
VIN Position	1	2	3	4	5	6	7	8	9	10	11	12	13	14	15	16	17
Sample VIN	1	H	G	E	N	1	6	4	*	X	L	0	0	0	0	0	1
	*1			*2					*3	*4	*5	*6					

*1 Manufacturer, Make and Type of vehicle

1HG : HONDA OF AMERICA MFG., INC., HONDA, Passenger car

*2 Line, series, body type, engine type and restraint system type
Refer to page2

*3 Check digit
Refer to S565.4(C) – CFR Part 565

*4 Model Year
X : 1999

*5 Plant representation

L : East Liberty, Ohio Plant, U.S.A.

*6 Sequential Production Number

FILE

2

INFORMATION ON CFR PART 565 – VEHICLE IDENTIFICATION NUMBER

CONTINUED

Issued :October 2, 1998

3. DESCRIPTION OF 2ND SECTION

No.	2nd sec.	Line and Series	Body type *1	Trans-mission *2	Restraint system *3		Engine Type (horse power)
					Front	Rear	
1	EN164	CIVIC SEDAN GX	4/SDN	4A/T	A	B	D16B5(110HP)

*1 Body Type

4/SDN : 4 Door Sedan

*2 Transmission Type

4A/T : 4 Speed Automatic

*3 Restraint System

A : Seat belt & Air bag (Driver & Passenger)

B : Seat belt

FILE

3

01-022-N11B-7001

HORSE CREEK MFG. & FABRICATION
FR 1993 P. O. BOX 158
COOKVILLE, TX 75558
TELEPHONE 903 572 1112 FAX 902 575 9933

FILE

POSITION 1,2,3	POSITION 4	POSITION 5	POSITION 6-7	POSITION 8
WORLD MANUFACTURING IDENTIFIER NUMBERS	TYPE OF FRAME	TYPE OF BODY	LENGTH OF TRAILER IN FEET	NUMBER OF AXELS
5BS	A=ANGLE IRON B=I-BEAM C=CHANNEL IRON	A=GOOSENECK B=CAR HAULER L=LIVESTOCK M=MOTORCYCLE U=UTILITY	16=16 FEET OVERALL LENGTH	1=ONE AXLE 2=TWO AXLES 3=THREE AXLES

POSITION 9	POSITION 10	POSITION 11	POSITION 12-17
CHECK DIGIT	IS THE YEAR	LOCATION OF FACTORY	SEQUENTIAL PRODUCTION NUMBERS
MATHEMATICS FORMULA	W=1998 X=1999	C=COOKVILLE	

International Structures L.L.C.

P.O. Box 1327, Turlock, CA. 95381-1327
250 D St., Turlock, CA. 95381
209.669.2790 FAX 209.669.2794

01-022-N11B-7002

FILE

October 13, 1998

Oris Youger
National Highway, Traffic and Safety Administration
400 Seventh St., SW
Washington, D.C. 20590

2P

Oris,

This letter is to advise you of International Structures, LLLc's intent to manufacture 8' wide commercial coaches (referred to as "trailers" by the California State DMV), with your 17 digit VIN number. Please find following a description of the characters contained in the vehicle identification numbers.

Section 1

1 – 3	These numbers have been assigned by the SAE and are 1T9.
4	This number will be used to describe the trailer type. International Structures will manufacture type B.= Commerical Coach
5	This number will be used to designate the trailer series. International Structures will manufacture series 2 – Standard Series
6 – 7	These numbers designate the length of the trailer and will vary. (in feet)

Section 2

8	This will signify the number of axles on the trailer.

Section 3

9	This is the check point.

Section 4

10	This letter designates the model year. The letter W is used for 1998.
11	This letter will be used to identify the plant of manufacture. International Structures only manufactures in Turlock, California, so the designate letter will be T – Turlock.
12 – 14	Designator digits assigned by SAE and are A A A.
15 – 17	These numbers are for International Structures to use as serial numbers for identification purposes beginning with 024 and increasing in numerical order.

Please advise if further information is required.

Sincerely,

Terry Pellegrini
DOH Coordinator

SAE The Engineering Society For Advancing Mobility Land Sea Air and Space
INTERNATIONAL®

ISO Registration authority for ISO 3780

The Society of Automotive Engineers has been appointed by ISO to act as registration authority for the implementation of International Standard ISO 3780.

400 COMMONWEALTH DRIVE, WARRENDALE, PA 15096-0001 U.S.A.
Phone. (724) 772-8511 Fax No. (724) 776-0243
E-Mail: douds@sae.org
Web: http://www.sae.org

October 9, 1998

WILLIAM E. LOWERY
INTERNATIONAL STRUCTURES, LLC.
250 D STREET
TURLOCK, CA 95380

Dear WILLIAM E. LOWERY:

This letter confirms the assignment of a World Manufacturer (Maker) Identifier (WMI) Code. As the agent of the NHTSA for the assignment of manufacturer identifiers pursuant to CFR 49 Part 565 Vehicle Identification Number Requirements (VIN), we are confirming the following code:

INTERNATIONAL STRUCTURES, LLC.
250 D STREET
TURLOCK, CA 95380
UNITED STATES

1 T 9 with the 12th, 13th, and 14th characters of the WMI Code to be A A A

MODULAR BUILDINGS

Should your company name and/or the ownership of your company change, or your address or your phone number change, please be sure to notify us as soon as possible.

If you have any questions concerning the construction of this WMI Code, you may call the National Highway Traffic Safety Administration at 202/366-6018 or fax 202/366-3081.

Sincerely,

Cathy Douds
WMI Coordinator

Enclosure

cc: VIN Coordinator

01-022-N/B-7003

INTERSTATE TRAILERS
14707 N. 95TH STREET
LONGMONT, COLORADO 80501
PH. (303)776-2889
FAX (303)776-0286

FILE

2p.

October 20. 1998

Position	Description	Code (s)
1	WMI	1Z9
2		
3		
4	Frame Type	A=Sq. Tube B=I Beam C=Channel Iron
5	Trailer Type	C=Car Hauler U=Utility Goosneck
6 7	Length Of Trailer In Feet	06=6 Foot Trailer 08=8 Foot Trailer 10=10 Foot Trailer 12=12 Foot Trailer ETC.
8	Number Of Axles	1=One Axle 2=Two Axle
9	Check Digit	FORMULA
10	Year	X=1999
11	Plant Location	L=Longmont
12	WMI	104
13		
14		
15	Production Sequence	001...ETC.
16		
17		

'98 OCT 29 A9:55

RECEIVED
NHTSA DOCKET

1

SAE The Engineering Society For Advancing Mobility Land Sea Air and Space
INTERNATIONAL®

ISO Registration authority for ISO 3780

The Society of Automotive Engineers has been appointed by ISO to act as registration authority for the implementation of International Standard ISO 3780.

400 COMMONWEALTH DRIVE, WARRENDALE, PA 15096-0001 U.S.A.
Phone. (724) 772-8511 Fax No. (724) 776-0243

E-Mail: douds@sae.org
Web: http://www.sae.org

October 19, 1998

HARVEY YOAKUM
INTERSTATE TRAILERS
14707 NORTH 95TH
LONGMONT, CO 80501

Dear HARVEY YOAKUM:

This letter confirms the assignment of a World Manufacturer (Maker) Identifier (WMI) Code. As the agent of the NHTSA for the assignment of manufacturer identifiers pursuant to CFR 49 Part 565 Vehicle Identification Number Requirements (VIN), we are confirming the following code:

INTERSTATE TRAILERS
14707 NORTH 95TH
LONGMONT, CO 80501
UNITED STATES

1 Z 9 with the 12th, 13th, and 14th characters of the WMI Code to be 1 0 4

UTILITY TRAILERS

Should your company name and/or the ownership of your company change, or your address or your phone number change, please be sure to notify us as soon as possible.

If you have any questions concerning the construction of this WMI Code, you may call the National Highway Traffic Safety Administration at 202/366-6018 or fax 202/366-3081.

Sincerely,

Cathy Douds
WMI Coordinator

RECEIVED
NHTSA DOCKET
'98 OCT 29 11:9:45

Enclosure

cc: VIN Coordinator

01-022-N1B-7004

Panoz Auto Development
1101 Highway 124
Hoschton, GA 30548

FILE

EXECUTIVE SECRETARIAT
1998 OCT 19 PM 1:49
NATIONAL HIGHWAY TRAFFIC SAFETY ADMIN.

1P.

Administrator
National Highway Traffic Safety Administration
400 Seventh Street, SW
Washington, DC 20590
Attention: VIN Coordinator

Subject: VIN Decoding Information for Panoz Auto Development

In accordance with 565.7(c) of CFR Part 565, Vehicle Identification Number, Panoz Auto Development hereby submits the Vehicle Identification Number (VIN) decoding information

VIN POSITION	DESCRIPTION	CODES
1, 2 & 3	WMI	1P9
4	Carline	P = Panoz Roadster
5	Series (Curb Weight)	A= Less than 3000 pounds B= 3001-4000 pounds
6	Body type	1=1996 and subsequent 2= 1995 and prior 3= Race version
7	Engine type	8=V8
8	Restraint type	1= Passive belts 2= Active belts 3= Driver & Passenger airbag
9	Check digit	Calculate per 49CFR565.4
10	Model year	V=1997 W=1998 X=1999 Y=2000
11	Plant location	B=Hoschton, GA
12,13,14	WMI	213
15,16,17	Sequential production number	001 002 003

The information required by 49 CFR part 566, Manufacturer Identification, is shown on the following page.

01-022-N11B-7005

Sun-Lite®, Inc.

October 7, 1998

FILE

3P

Administrator - N.H.T.S.A.
400 Seventh Street S.W.
Washington, D.C. 20590

Attention: V.I.N. Co-ordinator

David Coleman,

We are using the SAE Recreation Trailer Vehicle Identification System for our VIN numbers.

We have assigned the WMI code of 1S4 by the SAE to identify Sun-Lite, Inc.

The type of trailer is identified by a number in the fourth character position as follows:

"2" identifies travel trailers
"3" identifies fifth wheels

The axle configuration is identified by a number in the fifth character position as follows:

"2" identifies two axle construction

The length of the trailer is identified by a letter in the sixth character position as follows:

The letter "A"	identifies	less than 6 ft.
"B"	"	6 ft. to less than 8 ft.
"C"	"	8 ft. to less than 10 ft.
"D"	"	10 ft. to less than 12 ft.
"E"	"	12 ft. to less than 14 ft.
"F"	"	14 ft. to less than 16 ft.
"G"	"	16 ft. to less than 18 ft.
"H"	"	18 ft. to less than 20 ft.
"J"	"	20 ft. to less than 22 ft.
"K"	"	22 ft. to less than 24 ft.
"L"	"	24 ft. to less than 26 ft.
"M"	"	26 ft. to less than 28 ft.
"N"	"	28 ft. to less than 30 ft.

RECEIVED
NHTSA DOCKET
'98 OCT 29 A9:47

28868 Paul Drive • Elkhart, Indiana 46514
(219) 262-1923 (800) 327-7684 FAX (219) 262-1946
EMAIL: sunlite@skyenet.net WEB: http://www.sunliteinc.com

1

The seventh and eighth character identifies the model of the trailer / fifth wheel as follows:

Sun-Lite	190 series	"57"
"	210 "	"56"
"	220 "	"65"
"	245 "	"64"
"	250 "	"58"
"	260 "	"62"
"	275 "	"63"
"	523 "	"60"
"	525 "	"61"
Apache	19 series	"10"
"	21 "	"11"
"	220 "	"18"
"	245 "	"17"
"	25 "	"12"
"	26 "	"13"
"	275 "	"14"
"	523 "	"15"
"	525 "	"16"

The ninth character is the check digit. The tenth character identifies the trailer model year as follows:

Year	Code
1995	S
1996	T
1997	V
1998	W
1999	X
2000	Y
2001	1
2002	2
2003	3
2004	4
2005	5
2006	6
2007	7
2008	8
2009	9
2010	A
2011	B
2012	C

The eleventh character identifies the plant of manufacture as follows:

The number 3 identifies the Sun-Lite travel trailer / fifth wheel plant in Elkhart, IN.

The twelfth through the seventeenth character identifies the production sequence.

As you know, we had a problem with figuring the check digit, so serial #007931 through #008007 are incorrect.

The above change will be effective as of production in September 1998 and will start with production sequence number 008008.

The following is an example of one of our serial numbers:

1	S	4	3	2	L	6	1	1	X	3	0	0	8	0	0	8	
1	2	4	3	2	3	6	1	1	7	3	0	0	8	0	0	8	
8	7	6	5	4	3	2	10	0	9	8	7	6	5	4	3	2	
8	14	24	15	8	9	12	10	0	63	24	0	0	40	0	0	16	= 243

243/11= R1 (1=chk digit)

If you have any questions, please call me.

Sincerely,

Thomas L. Deane
President

01-022-NIIB-7006

NSA

T. R. ARNOLD & ASSOCIATES, INC.
industrialized housing advisors

700 E. BEARDSLEY AVENUE • P.O. BOX 1081 • ELKHART, IN 46515
(219) 264-0745 • FAX: (219) 264-0740

12 October 1998

Administrator
National Highway Traffic Safety Administration
400 Seventh Street, S.W.
Washington, DC 20590

FILE 2p.

ATTN: VIN Coordinator

The folowing VIN system is proposed for use by the manufacturer designated below. Please contact our office at the first opportunity with your determination of the acceptability of this system.

Manufacturer:	Vega Integrated Products, Inc.
Corporate Address:	907 South Diviaion Street
City, State, Zip:	Bristol, IN 46507

Position(s)	Information	Code(s)
1 - 3	SAE Assigned Identifier:	5 B U
4	Trailer Type(s):	per attached list
5	Series:	0 = Not Applicable
6	Body Type(s):	T = Bumper Hitch F = Fifth Wheel P = Park Trailer
7	Lengths:	per attached list
8	Axle Configurations:	0 = None (Truck Mounted) 1 = Single 2 = Tandem 3 = Triple
9	Check Digit As Required	
10	Year Code As Required	
11	Plant Location:	1 = Bristol, Indiana
12 - 17	Sequential Serial Number:	Commencing With 001

RECEIVED
NHTSA DOCKET
'98 OCT 29 A9:54

Do not hesitate to contact our office if you have any questions regarding this matter.

Sincerely,
T. R. ARNOLD & ASSOCIATES, INC.

Theodore P. Huff
Director of Certification

NATIONAL HIGHWAY TRAFFIC SAFETY ADMIN.
1998 OCT 21 PM 4:43

Enclosure

cc: Mr. Dick Burke

VIN CODES

VEHICLE TYPE

1 = Camping Trailer

2 = Travel Trailer

3 = Fifth Wheel Trailer

4 = Utility Trailer (except Van Body type)

5 = Van Body type Utility Trailer

6 = Boat Trailer

7 = Truck Camper

8 = Truck Cap

VEHICLE SERIES

T = Travel Trailer Series

F = Fifth Wheel Series

P = Park Trailer Series

VEHICLE LENGTH

A = Less Than 6'

B = 6' to Less Than 8'

C = 8' to Less Than 10'

D = 10' to Less Than 12'

E = 12' to Less Than 14'

F = 14' to Less Than 16'

G = 16' to Less Than 18'

H = 18' to Less Than 20'

J = 20' to Less Than 22'

K = 22' to Less Than 24'

L = 24' to Less Than 26'

M = 26' to Less Than 28'

N = 28' to Less Than 30'

P = 30' to Less Than 32'

R = 32' to Less Than 34'

S = 34' to Less Than 36'

T = 36' to Less Than 38'

U = 38' to Less Than 40'

V = 40" and Over

01-022-NIB-7007 NSA

T. R. ARNOLD & ASSOCIATES, INC.
industrialized housing advisors

700 E. BEARDSLEY AVENUE • P.O. BOX 1081 • ELKHART, IN 46515
(219) 264-0745 • FAX: (219) 264-0740

2 October 1998

Administrator
National Highway Traffic Safety Administration
400 Seventh Street, S.W.
Washington, DC 20590

2p.

FILE

ATTN: VIN Coordinator

The folowing VIN system is proposed for use by the manufacturer designated below. Please contact our office at the first opportunity with your determination of the acceptability of this system.

Manufacturer:	Equiquest Horse Trailers, Inc.
Corporate Address:	2933-A Thorne Drive
City, State, Zip:	Elkhart, IN 46514

Position(s)	Information	Code(s)
1 - 3	SAE Assigned Identifier:	1 - E - 9
4	Trailer Type(s):	per attached list
5	Series:	0 = Not Applicable
6	Body Type(s):	0 = Not Applicable
7	Lengths:	per attached list
8	Axle Configurations:	0 = None (Truck Mounted) 1 = Single 2 = Tandem 3 = Triple
9	Check Digit As Required	
10	Year Code As Required	
11	Plant Location:	1 = Elkhart, Indiana
12 - 14	SAE Assigned Identifies	2 - 4 - 2
15 - 17	Sequential Serial Number:	Commencing With 001

Do not hesitate to contact our office if you have any questions regarding this matter.

Sincerely,
T. R. ARNOLD & ASSOCIATES, INC.

Theodore P. Huff, C.B.O.
Director of Certification

EXECUTIVE SECRETARIAT
1998 OCT 19 AM 8:59
NATIONAL HIGHWAY TRAFFIC SAFETY ADMIN.

Enclosure

cc: Mr. Ken Morlewski

VIN CODES

VEHICLE TYPE

1 = Camping Trailer

2 = Travel Trailer

3 = Fifth Wheel Trailer

4 = Utility Trailer (except Van Body type)

5 = Van Body type Utility Trailer

6 = Boat Trailer

7 = Truck Camper

8 = Truck Cap

VEHICLE LENGTH

A = Less Than 6'

B = 6' to Less Than 8'

C = 8' to Less Than 10'

D = 10' to Less Than 12'

E = 12' to Less Than 14'

F = 14' to Less Than 16'

G = 16' to Less Than 18'

H = 18' to Less Than 20'

J = 20' to Less Than 22'

K = 22' to Less Than 24'

L = 24' to Less Than 26'

M = 26' to Less Than 28'

N = 28' to Less Than 30'

P = 30' to Less Than 32'

R = 32' to Less Than 34'

S = 34' to Less Than 36'

T = 36' to Less Than 38'

U = 38' to Less Than 40'

V = 40" and Over

01-022-NIIB-7008

Tisdell's Implements
P.O. Box 1015
Nicoma Park, OK 73066

FILE

2P.

October 19, 1998

Administrator
National Highway Traffic Safety Administration
400 Seventh Street, SW
Washington, DC 20590
Attn.: VIN Coordinator

Subject: VIN Decoding Information for Tisdell's Implements

In accordance with 565.7(c) of 49 CFR Part 565, *Vehicle Identification Number*, Tisdell's Implements hereby submits Vehicle Identification Number (VIN) decoding information.

VIN POSITION	DESCRIPTION	CODES	
1,2,&3	WMI	1T9	
4	Trailer Type	U= Utility C= Cargo W=Watercraft	S=Stock H=Horse
5	Body Type	C= Car Hauler P= Pipe Rail S= Standard	E= Enclosed G= Gooseneck X= Special
6&7	Length of Trailer	Actual Length of Trailer *(rounded to nearest foot)* For example:	08=08 Feet long 10= 10 Feet Long
8	Number of Axles	1= 1 Axle 2= 2 Axles	
9	Check Digit	To Be Calculated	
10	Model Year	W= 1998 , X= 1999, Y= 2000	
11	Plant Location	N= Nicoma Park, Oklahoma	
12, 13, & 14	WMI	578	
15, 16, & 17	Sequential Production Number	001, 002, 003,...	

If any further information is needed or for any questions, please contact me at (405) 769-5456. Otherwise, I will be awaiting confirmation that these codes are acceptable to guidelines.

Thank You,

Tony Tisdell

Tony Tisdell, Owner
Tisdell's Implements

1

SAE The Engineering Society For Advancing Mobility Land Sea Air and Space®
INTERNATIONAL

Registration authority for ISO 3780

The Society of Automotive Engineers has been appointed by ISO to act as registration authority for the implementation of International Standard ISO 3780.

400 COMMONWEALTH DRIVE, WARRENDALE, PA 15096-0001 U.S.A.
Phone. (724) 772-8511 Fax No. (724) 776-0243

E-Mail: douds@sae.org
Web: http://www.sae.org

October 7, 1998

TONY TISDELL
TISDELL'S IMPLEMENTS
11336 NE 23RD
PO BOX 1015
NICOMA PARK, OK 73066

Dear TONY TISDELL:

This letter confirms the assignment of a World Manufacturer (Maker) Identifier (WMI) Code. As the agent of the NHTSA for the assignment of manufacturer identifiers pursuant to CFR 49 Part 565 Vehicle Identification Number Requirements (VIN), we are confirming the following code:

TISDELL'S IMPLEMENTS
11336 NE 23RD
PO BOX 1015
NICOMA PARK, OK 73066
UNITED STATES

1 T 9 with the 12th, 13th, and 14th characters of the WMI Code to be 5 7 8

TRAILERS

Should your company name and/or the ownership of your company change, or your address or your phone number change, please be sure to notify us as soon as possible.

If you have any questions concerning the construction of this WMI Code, you may call the National Highway Traffic Safety Administration at 202/366-6018 or fax 202/366-3081.

Sincerely,

Cathy Douds
WMI Coordinator

Enclosure

cc: VIN Coordinator

2

01-022-N1B-7009

VECTOR performance proven VACUUM SOLUTIONS

FILE

REVISED VIN SUBMISSION - AMENDMENT I

September 30, 1998

Administrator
National Highway Traffic Safety Administration
400 Seventh Street, SW
Washington, DC 20590
ATTN: VIN Coordinator

2p,

Subject: Revised VIN Decoding Information from Vector Technologies Ltd.

In accordance with §565.7(c) of 49 CFR Part 565, *Vehicle Identification Number*, Vector Technologies Ltd. hereby revises the Vehicle Identification Number (VIN) decoding information. We also enclose the previously submitted original VIN decoding information dated February 15, 1998.

VIN POSITION:	DESCRIPTION:	CODES:
1,2 & 3	WMI	1V9
4	Trailer Type	P=Pull Type Pintle
5	Body Type	T=Tandem
6 & 7	Length of Trailer (all lengths rounded to outside)	18=18 Feet 21=21 Feet
8	Number of Axles	2=2 Axles 3=3 Axles
9	Check Digit	Calculate-SEE 49 CFR 565.4
10	Model Year	W=1998 X=1999
11	Plant Location	1-Milwaukee
12,13 & 14	WMI	0,9,0
15,16 & 17	Sequential Production Number	001 002

Enclosure: Original VIN Decoding Information

VECTOR TECHNOLOGIES LTD. / 6820 North 43rd Street / Milwaukee, Wisconsin 53209-2215 / 414.247.7100 / Fax 414.247.7110

01-022-N11B-7009

VECTOR performance proven VACUUM SOLUTIONS

VIN SUBMISSION

February 15, 1998

2p.

Administrator
National Highway Traffic Safety Administration
400 Seventh Street, SW
Washington, DC 20590
ATTN: VIN Coordinator

Subject: **VIN Decoding Information for Vector Technologies Ltd.**

In accordance with §565.7(c) of 49 CFR Part 565, *Vehicle Identification Number,* Vector Technologies Ltd. hereby submits Vehicle Identification Number (VIN) decoding information.

VIN POSITION:	DESCRIPTION:	CODES:
1,2 & 3	WMI	1V9
4	Trailer Type	F=WWF L=Luke V=Vector
5	Body Type	T=Tandem
6 & 7	Length of Trailer (all lengths rounded to outside)	18=18 Feet 21=21 Feet
8	Number of Axles	2=2 Axles 3=3 Axles
9	Check Digit	Calculate-SEE 49 CFR 565.4
10	Model Year	W=1998 X=1999
11	Plant Location	1-Milwaukee
12,13 & 14	WMI	0,9,0
15,16 & 17	Sequential Production Number	001 002

2

VECTOR TECHNOLOGIES LTD. / 6820 North 43rd Street / Milwaukee, Wisconsin 53209-2215 / 414.247.7100 / Fax 414.247.7110

01-022-N1-B-7010 NSA

TOYOTA

TOYOTA TECHNICAL CENTER, USA, INC.

FILE

October 8, 1998

RECEIVED
NHTSA DOCKET
'98 OCT 29 A9:59

17 P

Dr. Ricardo Martinez
Administrator
National Highway Traffic Safety Administration
400 Seventh Street, S.W.
Washington, D.C. 20590

Attention: VIN Coordinator

RE: VIN Coding System on 1999 and 2000 Toyota and Lexus Vehicles

Dear Dr. Martinez:

Pursuant to 49 CFR Part 565, "Vehicle Identification Number Content Requirements," on behalf of Toyota Motor Corporation we hereby submit the information on the Vehicle Identification Number Coding System applicable to the 2000 model year Toyota Tundra.

This model is manufactured by Toyota Motor Manufacturing, Indiana, Inc. and is marketed by Toyota.

We are also enclosing supplements to the Toyota and Lexus Vehicle Identification Number Coding Systems Applicable to 1999 Models which were submitted in June 1998. Please replace those pages with the enclosed.

Thank you for your cooperation in this matter.

Sincerely,

TOYOTA TECHNICAL CENTER, U.S.A., INC.

Yaichi Oishi
General Manager

EXECUTIVE SECRETARIAT
1998 OCT -8 PM 4: 32
NATIONAL HIGHWAY TRAFFIC SAFETY ADMIN.

YO:cc
Enclosure

1850 M Street, NW, Washington, D.C. 20036 (202) 775-1707 FAX: (202) 463-8513

TOYOTA TUNDRA VEHICLE IDENTIFICATION NUMBER

CODING SYSTEM

APPLICABLE TO 2000 MODEL

[Manufactured by TMMI]

FILE

September 1998

2

TOYOTA TUNDRA "Vehicle Identification Number" Coding System
(2000 Model)

Example

	Section 1			Section 2					Check Digit	Section 3							
Digit	1	2	3	4	5	6	7	8	9	10	11	12	13	14	15	16	17
Example	5	T	B	J	N	3	2	1	2	Y	S	0	0	0	0	0	1

Section 1 : Manufacturer, Make and Type

	Code	Manufacturer	Make	Type
Digits	5TB	Toyota Motor Manufacturing, Indiana, Inc. *	Toyota	Truck

* Vehicles are assembled by Toyota Motor Manufacturing Indiana, Inc., but marketed by Toyota.

Section 2 : Vehicle Description Section (VDS)

		Code	Description
4th Digit	Cab, Chassis, Drive Train & Brake System Type	J	Standard Cab , Standard Wheelbase , 2WD
		K	Standard Cab , Standard Wheelbase , 4WD
		R	Large Cab , Standard Wheelbase , 2WD
		B	Large Cab , Standard Wheelbase , 4WD
5th Digit	Engine Type	N	5VZ-FE
		T	2UZ-FE
6th Digit	Series	3	VCK30L , UCK30L
		4	VCK40L , UCK40L
7th Digit	Grade	2	DX
		4	SR5
		8	LIMITED
8th Digit	Line	1	TUNDRA

FILE

3

GVWR (4th, 5th, 6th, 7th & 8th Digits)			
JN321	5500 lb (Class D)	KN441	5500 lb (Class D)
KT441	6200 lb (Class E)	RN381	5700 lb (Class D)
RN341	5700 lb (Class D)	RT381	6200 lb (Class E)
RT341	6200 lb (Class E)	BN481	6000 lb (Class D)
BN441	6000 lb (Class D)	BT481	6050 lb (Class E)
BT441	6050 lb (Class E)		

Section 3 : Vehicle Model Year, Plant of Manufacture and Serial Number

		Code	Description
10th Digit	Vehicle Model Year	Y	2000 Model
11th Digit	Plant of Manufacture	S	Indiana
12th-17th Digits	Serial Number	000001 Thru 999999	----

FILE

4

TOYOTA AND LEXUS VEHICLE IDENTIFICATION NUMBER

CODING SYSTEM

APPLICABLE TO 1999 MODELS

[Manufactured by TOYOTA]

Supplement to
"LEXUS Vehicle Identification Number Coding System
Applicable to 1999 Model"
(Dated June 1998)

This information includes
the following new models;

LEXUS ES 300	TOYOTA Camry
LEXUS GS 300	TOYOTA Celica
LEXUS GS 400	LEXUS RX 300
LEXUS LS 400	TOYOTA RAV4
LEXUS SC 300	TOYOTA 4Runner
LEXUS SC 400	LEXUS LX 470
TOYOTA Paseo	TOYOTA Land Cruiser
TOYOTA Tercel	

September 1998

FILE

5

TABLE OF CONTENTS

Contents	Page
TOYOTA and LEXUS 'VIN' Coding system	1
Attachment I (1st section)	2
Attachment II (2nd section)	3
Attachment III (3rd section)	7

(Abbreviations)

#1	CP	Coupe
	DR	Door
	GVWR	Gross Vehicle Weight Rating
#1	IFS	Independent Front Suspension
#1	LB	Liftback
#1	SDN	Sedan
#1	STD	Standard
	VDS	Vehicle Description Section
	WGN	Wagon
#1	W/	With
	2WD	Two Wheel Drive
	4WD	Four Wheel Drive

#1 added 06/09/98

FILE

6

TOYOTA and LEXUS 'VIN' Coding System

Example: J T 6 G F 1 0 U 1 X 0 0 0 0 0 0 1

- 0 0 0 0 0 1 — Serial Number [Six characters]
- 0 — Plant of Manufacture [One character] (Ref; Attachment Ⅲ)
- X — Vehicle Model Year [One character] X: 1999 Model
- 1 — Check Digit [One character]
- G F 1 0 U — Vehicle Description Section (VDS) [Five characters] (Ref; Attachment Ⅱ)
- J T 6 — Manufacturer, Make and Type [Three characters] (Ref; Attachment Ⅰ)

FILE

Attachment I

TOYOTA AND LEXUS 1999 MODEL

MANUFACTURER, MAKE AND TYPE CODE

Code	Manufacturer	Make	Type
JT2 #1	Toyota	Toyota	Passenger Car
JT3 #1	Toyota	Toyota	Multipurpose Passenger Vehicle
JT4 #1	Toyota	Toyota	Truck
JT5 #1	Toyota	Toyota	Incomplete Vehicle
JT6	Toyota	Lexus	Multipurpose Passenger Vehicle
JT8 #1	Toyota	Lexus	Passenger Car

#1 added 06/09/98

FILE

4

Attachment II

revised 09/18/98

TOYOTA AND LEXUS 1999 Model VDS Code

I Passenger Car

(Example) B F 2 8 K

Character of the VDS: 1st Digit, 2nd Digit, 3rd Digit, 4th Digit, 5th Digit

Vehicle Name	Body Type		Engine Type		Series		Restraint System Type		Line	
ES 300 #1	B	4DR SDN 2WD	F	1MZ-FE	2	MCV20L	8	D&P Seats: Manual Belt W/Air Bag and Side Air Bag	G	ES 300
GS 300 #1	B	4DR SDN 2WD	D	2JZ-GE	6	JZS160L	8	D&P Seats: Manual Belt W/Air Bag and Side Air Bag	S	GS 300
GS 400 #1	B	4DR SDN 2WD	H	1UZ-FE	6	UZS160L	8	D&P Seats: Manual Belt W/Air Bag and Side Air Bag	X	GS 400
LS 400 #1	B	4DR SDN 2WD	H	1UZ-FE	2	UCF20L	8	D&P Seats: Manual Belt W/Air Bag and Side Air Bag	F	LS 400
SC 300 #1	C	2DR CP 2WD	D	2JZ-GE	3	JZZ31L	2	D&P Seats: Manual Belt W/Air Bag	Z	SC 300
SC 400 #1	C	2DR CP 2WD	H	1UZ-FE	3	UZZ30L	2	D&P Seats: Manual Belt W/Air Bag	Y	SC 400
Paseo #1	C	2DR CP 2WD	C	5E-FE	5	EL54L	2	D&P Seats: Manual Belt W/Air Bag	H	Paseo
Tercel #1	A B	2DR SDN 2WD 4DR SDN 2WD	C	5E-FE	5	EL53L	2	D&P Seats: Manual Belt W/Air Bag	L	Tercel
Camry #1	B	4DR SDN 2WD	F G N	1MZ-FE 5S-FE 5S-FNE #2	2 2 2	MCV20L SXV20L SXV23L #2	2 8	D&P Seats: Manual Belt W/Air Bag D&P Seats: Manual Belt W/Air Bag and Side Air Bag	K	Camry

#1 added 06/09/98
#2 added 09/18/98

(CONTINUED)

FILE

9

Vehicle Name	Body Type		Engine Type		Series		Restraint System Type		Line	
Celica #1	D	3DR LB 2WD	G	5S-FE	0	ST204L	2	D&P Seats: Manual Belt W/Air Bag	T	Celica

#1 added 06/09/98

(CONTINUED)

FILE

10

II Multipurpose Passenger Vehicle

(Example) G F 1 0 U

Character of the VDS	1st Digit	2nd Digit	3rd Digit	4th Digit	5th Digit

Vehicle Name	Body Type		Engine Type		Series		Grade		Line	
RX 300	G	4DR WGN 2WD	F	1MZ-FE	1	MCU10L	0	----	U	RX 300
	H	4DR WGN 4WD			1	MCU15L				
	GVWR (from 1st to 5th Digits) GF10U --- 4950 (Class C) HF10U --- 4950 (Class C)									
RAV4	G	4DR WGN 2WD	P	3S-FE	1	SXA16L	0	----	V	RAV4
			S	1BM	1	SXA11L			V	RAV4 EV
	H	4DR WGN 4WD			1	SXA15L				
					1	SXA10L				
	X	2DR WGN 2WD			1	BEA11L				
	Y	2DR WGN 4WD								
	GVWR (from 1st to 5th Digits) GP10V --- 3915 (Class B) XP10V --- 3549 (Class B) HP10V --- 3948 (Class B) YP10V --- 3644 (Class B) GS10V --- 4266 (Class C)									
#1										
4Runner	G	4DR WGN 2WD	M	3RZ-FE	8	RZN180L	4	----	R	4Runner
			N	5VZ-FE	8	VZN180L	6	SR5		
	H	4DR WGN 4WD			8	RZN185L	7	Limited		
					8	VZN185L				
	GVWR (from 1st to 5th Digits) GM84R --- 5250 (Class D) HM84R --- 5250 (Class D) GN86R --- 5250 (Class D) HN86R --- 5250 (Class D) GN87R --- 5250 (Class D) HN87R --- 5250 (Class D)									
#1										
LX 470	H	4DR WGN 4WD	T	2UZ-FE	0	UZJ100L	0	----	W	LX 470
	GVWR (from 1st to 5th Digits) HT00W --- 6860 (Class E)									
#1										
Land Cruiser	H	4DR WGN 4WD	T	2UZ-FE	0	UZJ100L	5	VX	J	Land Cruiser
	GVWR (from 1st to 5th Digits) HT05J --- 6860 (Class E)									
#1										

#1 added 06/09/98

(CONTINUED)

FILE

(1)

Ⅲ. Incomplete Vehicle

(Example) F C 5 2 H

Character of the VDS: 1st Digit, 2nd Digit, 3rd Digit, 4th Digit, 5th Digit

Vehicle Name	Body Type		Engine Type		Series		Restraint System Type		Line	
Paseo #1	F	2DR Convertible 2WD	C	5E-FE	5	EL54L	2	D&P Seats: Manual Belt W/Air Bag	H	Paseo
Celica #1	F	2DR Convertible 2WD	G	5S-FE	0	ST204L	2	D&P Seats: Manual Belt W/Air Bag	T	Celica

#1 added 06/09/98

(CONTINUED)

FILE

12

Attachment Ⅲ

revised 09/18/98

TOYOTA and LEXUS 1999 MODEL MANUFACTURING PLANT CODE

Vehicle Name	Applicable VDS	Code (11 th Digit)	Plant of Manufacture
ES 300 #1	BF28G	0 - 4	Tsutsumi Plant, Toyota Motor Corp.
		5	Toyota Motor Kyushu, Inc.
GS 300 #1	BD68S	0 - 9	Tahara Plant, Toyota Motor Corp.
GS 400 #1	BH68X	0 - 9	Tahara Plant, Toyota Motor Corp.
LS 400 #1	BH28F	0 - 9	Tahara Plant, Toyota Motor Corp.
SC 300 #1	CD32Z	1 - 9	Higashifuji Plant, Kanto Auto Works, LTD.
SC 400 #1	CH32Y	1 - 9	Higashifuji Plant, Kanto Auto Works, LTD.
Paseo #1	*C52H	0 - 9	Takaoka Plant, Toyota Motor Corp.
Tercel #1	*C52L	0 - 8	Takaoka Plant, Toyota Motor Corp.
Camry #1	BF2*K BG2*K BN22K #2	0 - 4 0 - 5 0 - 5 #2	Tsutsumi Plant, Toyota Motor Corp.
Celica #1	*G02T	0 - 9	Tahara Plant, Toyota Motor Corp.

#1 added 06/09/98
#2 added 09/18/98

(CONTINUED)

FILE

13

Vehicle Name	Applicable VDS	Code (11 th Digit)	Plant of Manufacture
RX 300	*F10U	0 - 9	Toyota Motor Kyushu, Inc.
RAV4	GP10V , XP10V	0 - 6	Motomachi Plant, Toyota Motor Corp.
		7 - 9	Tahara Plant, Toyota Motor Corp.
#1	HP10V , YP10V GS10V	0 - 9	Motomachi Plant, Toyota Motor Corp.
4Runner	G*8*R	0 - 9	Tahara Plant, Toyota Motor Corp.
	H*8*R	0 - 8	Tahara Plant, Toyota Motor Corp.
#1	H*8*R	9	Hamura Plant, Hino Motors, LTD.
LX 470 #1	HT00W	0 - 4	Honsya Plant, Toyota Motor Corp.
Land Cruiser #1	HT05J	0 - 4	Honsya Plant, Toyota Motor Corp.

#1 added 06/09/98

Note: Each asterisk indicates one space where a character, (which is determined according to the VDS code as shown in Attachment II,) will be added.

FILE

14

TOYOTA TACOMA VEHICLE IDENTIFICATION NUMBER

CODING SYSTEM

APPLICABLE TO 1999 MODEL

[Manufactured by TABC]

Supplement to
"TOYOTA TACOMA Vehicle Identification Number Coding System
Applicable to 1999 Model"
(Dated June 1998)

FILE

September 1998

15

TOYOTA TACOMA "Vehicle Identification Number" Coding System
(1999 Model)

Example

	Section 1			Section 2					Check Digit	Section 3							
Digit	1	2	3	4	5	6	7	8	9	10	11	12	13	14	15	16	17
Example	4	T	A	N	L	4	2	N	2	X	Z	0	0	0	0	0	1

Section 1 : Manufacturer, Make and Type

	Code	Manufacturer	Make	Type
Digits	4TA	TABC Inc. *	Toyota	Truck

* Vehicles are assembled by TABC Inc., but marketed by Toyota.

Section 2 : Vehicle Description Section (VDS)

		Code	Description
4th Digit	Cab, Chassis, Drive Train & Brake System Type	N	Standard Cab , Short Wheelbase , W/IFS 1/2 ton , 2WD , Hydraulic
		V	Extra Cab , Extra Long Wheelbase , W/IFS 1/2 ton , 2WD , Hydraulic
		P	Standard Cab , Short Wheelbase , W/IFS 1/2 ton , 4WD , Hydraulic
		W	Extra Cab , Extra Long Wheelbase , W/IFS 1/2 ton , 4WD , Hydraulic
		S	Extra Cab , Short Wheelbase , W/IFS 1/2 ton , 2WD , Hydraulic
5th Digit	Engine Type	L	2RZ-FE
		M	3RZ-FE
		N	5VZ-FE
6th Digit	Series	4	RZN140L
		5	RZN150L , VZN150L
		6	RZN161L
		7	RZN171L , VZN170L
		9	RZN191L , RZN196L , VZN195L
7th Digit	Grade	2	DELUXE
		4	SR5
8th Digit	Line	N	TOYOTA TACOMA

FILE

16

GVWR (4th, 5th, 6th, 7th & 8th Digits)				
NL42N	4250 lb (Class C)	VN52N	4500 lb (Class C)	
VL52N	4500 lb (Class C)	PM62N	5100 lb (Class D)	
WN72N	5100 lb (Class D)	WM72N	5100 lb (Class D)	
WN74N	5100 lb (Class D)	NM92N	5100 lb (Class D)	
SM92N	5100 lb (Class D)	SN92N	5100 lb (Class D)	#1

Section 3 : Vehicle Model Year, Plant of Manufacture and Serial Number

		Code	Description
10th Digit	Vehicle Model Year	X	1999 Model
11th Digit	Plant of Manufacture	Z	Fremont (CA)
12th-17th Digits	Serial Number	000001 Thru 999999	----

#1 revised 09/18/98

FILE

17

01- 022- N11 B- 7011

1A9 B P _'- _" _ _ _ C 471 001

WORLD MAKER IDENTIFIER

SERIES → B=BALL HITCH

TRAILER TYPE → P= PARK MODEL

ACTUAL LENGTH
FEET & INCHES

NO. OF AXLES

CHECK DIGIT

YEAR CODE
(TABLE #2)

PLANT LOCATION
C=CONEWANGO,NY

ASSIGNED BY SAE

PRODUTION #
001=FIRST MADE

FILE

TABLE-2

P=	1993
R=	1994
S=	1995
T=	1996
V=	1997
W=	1998
X=	1999
Y=	2000
1=	2001
2=	2002
3=	2003
4=	2004
5=	2005
6=	2006
7=	2007
8=	2008
9=	2009
A=	2010
B=	2011
C=	2012
D=	2012

ADIRONDACK KOTTAGES
5535 MAIN ST.
CONEWANGO VALLEY, NY 14726

A subsidiary of BMW AG

BMW of North America, Inc.

01-022-N11B-7012

October 26, 1998

FILE

Ref:A:fw18298

U.S. Department of Transportation
National Highway Traffic Safety Administration
400 Seventh Street, S.W.
Washington, D.C. 20590
Attention: VIN Coordinator

RECEIVED NHTSA DOCKET 98 NOV 19 P2:03

Dear Sir/Madam:

This letter is in reference to FMVSS 115 and Part 565. Please find enclosed the information necessary to decipher the characters contained in the Vehicle Identification Numbers (VINs) of the following 1999 U.S. BMW models:

318ti 2-door Hatchback
323i 4-door Sedan
323is 2-door Coupe
323iC 2-door Convertible
328i 4-door Sedan
328is 2-door Coupe
328iC 2-door Convertible
M3 Coupe 2-door Coupe
M3 Convertible 2-door Convertible
Z3 roadster 2.3 2-door Convertible
Z3 roadster 2.8 2-door Convertible
Z3 coupe 2.8 2-door Hatchback
M roadster 2-door Convertible
M coupe 2-door Hatchback
528i 4-door Sedan
528i Touring 4-door Wagon
540i 4-door Sedan
540i Protection 4-door Sedan
540i Touring 4-door Wagon
740i 4-door Sedan
740iL 4-door Sedan
750iL 4-door Sedan

Sincerely,

Karl-Heinz Ziwica
General Manager
Environmental Engineering

Enclosures

Headquarters
300 Chestnut Ridge Road
Woodcliff Lake, NJ 07675

Mailing Address
BMW Plaza
Montvale, NJ 07645

Telephone
(201) 307-4000

Facsimile
(201) 782-0764

RECEIVED 98 NOV -2 AM 10:11 OFFICE OF DEFECTS INVESTIGATION

RECEIVED NSA-30 98 NOV 4 P4:01

Printed on Recycled Paper

Decipherment of BMW VIN's According to FMVSS 115 and Part 565

Table for 318ti Coupe - 1999 Model Year

WBA CG73 3 - X A 000000

WORLD MANUFACTURER IDENTIFIER

WBA = BMW-AG
Munich, GERMANY
Passenger Car

VEHICLE DESCRIPTION SECTION

CG73 or CG83	Line:	3
	Series:	318ti
	Body Type:	2-Door Hatchback
	Engine:	138 BHP 115.7 cu. in. (1.895 liter) 4-Cylinder Gasoline Engine
	Mfr:	BMW-AG

RESTRAINT SYSTEM

3 = Manual Safety Belts with Driver and Passenger
Depowered Supplemental Restraint System (SRS)

CHECK DIGIT

To be assigned by Manufacturer.

MODEL YEAR

X = 1999

PLANT OF MANUFACTURE

A, K = Munich, GERMANY

SEQUENTIAL PRODUCTION NUMBER

To be assigned by Manufacturer.

Decipherment of BMW VIN's According to FMVSS 115 and Part 565

Table for 323i Sedan - 1999 Model Year

WBA AM33 3 - X F 000000

WORLD MANUFACTURER IDENTIFIER

WBA = BMW-AG
Munich, GERMANY
Passenger Car

VEHICLE DESCRIPTION SECTION

AM33	Line:	3
or	Series:	323i
AM43	Body Type:	4-Door Sedan
	Engine:	170 BHP 152.2 cu. in. (2.494 liter) 6-Cylinder Gasoline Engine
	Mfr:	BMW-AG

RESTRAINT SYSTEM

3 = Manual Safety Belts with Driver and Passenger
Depowered Supplemental Restraint System (SRS)

CHECK DIGIT

To be assigned by Manufacturer.

MODEL YEAR

X = 1999

PLANT OF MANUFACTURE

F, K = Munich, GERMANY

SEQUENTIAL PRODUCTION NUMBER

To be assigned by Manufacturer.

Decipherment of BMW VIN's According to FMVSS 115 and Part 565

Table for 323is Coupe - 1999 Model Year

WBA BF73 3 - X E 000000

WORLD MANUFACTURER IDENTIFIER

WBA = BMW-AG
Munich, GERMANY
Passenger Car

VEHICLE DESCRIPTION SECTION

BF73 or BF83	Line:	3
	Series:	323is
	Body Type:	2-Door Coupe
	Engine:	170 BHP 152.2 cu. in. (2.494 liter) 6-Cylinder Gasoline Engine
	Mfr:	BMW-AG

RESTRAINT SYSTEM

3 = Manual Safety Belts with Driver and Passenger
Depowered Supplemental Restraint System (SRS)

CHECK DIGIT

To be assigned by Manufacturer.

MODEL YEAR

X = 1999

PLANT OF MANUFACTURE

E = Regensburg, GERMANY

SEQUENTIAL PRODUCTION NUMBER

To be assigned by Manufacturer.

Decipherment of BMW VIN's According to FMVSS 115 and Part 565

Table for 323iC Convertible - 1999 Model Year

WBA BJ73 3 - X E 000000

WORLD MANUFACTURER IDENTIFIER

WBA = BMW-AG
Munich, GERMANY
Passenger Car

VEHICLE DESCRIPTION SECTION

BJ73 or BJ83	Line:	3
	Series:	323iC
	Body Type:	2-Door Convertible
	Engine:	170 BHP 152.2 cu. in. (2.494 liter) 6-Cylinder Gasoline Engine
	Mfr:	BMW-AG

RESTRAINT SYSTEM

3 = Manual Safety Belts with Driver and Passenger
Depowered Supplemental Restraint System (SRS)

CHECK DIGIT

To be assigned by Manufacturer.

MODEL YEAR

X = 1999

PLANT OF MANUFACTURE

E = Regensburg, GERMANY

SEQUENTIAL PRODUCTION NUMBER

To be assigned by Manufacturer.

Decipherment of BMW VIN's According to FMVSS 115 and Part 565

Table for 328i Sedan - 1999 Model Year

WBA AM53 3 - X F 000000

WORLD MANUFACTURER IDENTIFIER

WBA = BMW-AG
Munich, GERMANY
Passenger Car

VEHICLE DESCRIPTION SECTION

AM53	Line:	3
or	Series:	328i
AM63	Body Type:	4-Door Sedan
	Engine:	193 BHP 170.4 cu. in. (2.793 liter) 6-Cylinder Gasoline Engine
	Mfr:	BMW-AG

RESTRAINT SYSTEM

3 = Manual Safety Belts with Driver and Passenger
Depowered Supplemental Restraint System (SRS)

CHECK DIGIT

To be assigned by Manufacturer.

MODEL YEAR

X = 1999

PLANT OF MANUFACTURE

F, K = Munich, GERMANY

SEQUENTIAL PRODUCTION NUMBER

To be assigned by Manufacturer.

Decipherment of BMW VIN's According to FMVSS 115 and Part 565

Table for 328is Coupe - 1999 Model Year

WBA BG13 3 - X E 000000

WORLD MANUFACTURER IDENTIFIER

WBA = BMW-AG
Munich, GERMANY
Passenger Car

VEHICLE DESCRIPTION SECTION

BG13	Line:	3
or	Series:	328is
BG23	Body Type:	2-Door Coupe
	Engine:	190 BHP 170.4 cu. in. (2.793 liter) 6-Cylinder Gasoline Engine
	Mfr:	BMW-AG

RESTRAINT SYSTEM

3 = Manual Safety Belts with Driver and Passenger
Depowered Supplemental Restraint System (SRS)

CHECK DIGIT

To be assigned by Manufacturer.

MODEL YEAR

X = 1999

PLANT OF MANUFACTURE

E = Regensburg, GERMANY

SEQUENTIAL PRODUCTION NUMBER

To be assigned by Manufacturer.

Decipherment of BMW VIN's According to FMVSS 115 and Part 565

Table for 328iC Convertible - 1999 Model Year

WBA BK73 3 - X E 000000

WORLD MANUFACTURER IDENTIFIER

WBA = BMW-AG
Munich, GERMANY
Passenger Car

VEHICLE DESCRIPTION SECTION

BK73	Line:	3
or	Series:	328iC
BK83	Body Type:	2-Door Convertible
	Engine:	190 BHP 170.4 cu. in. (2.793 liter) 6-Cylinder Gasoline Engine
	Mfr:	BMW-AG

RESTRAINT SYSTEM

3 = Manual Safety Belts with Driver and Passenger
Depowered Supplemental Restraint System (SRS)

CHECK DIGIT

To be assigned by Manufacturer.

MODEL YEAR

X = 1999

PLANT OF MANUFACTURE

E = Regensburg, GERMANY

SEQUENTIAL PRODUCTION NUMBER

To be assigned by Manufacturer.

Decipherment of BMW VIN's According to FMVSS 115 and Part 565

Table for M3 Coupe - 1999 Model Year

WBS BG93 3 - X E 000000

WORLD MANUFACTURER IDENTIFIER

WBS = BMW M GmbH
Munich, GERMANY
Passenger Car

VEHICLE DESCRIPTION SECTION

BG93	Line:	3
	Series:	M3
	Body Type:	2-Door Coupe
	Engine:	240 BHP 192.3 cu. in. (3.152 liter) 6-Cylinder Gasoline Engine
	Mfr:	BMW M GmbH

RESTRAINT SYSTEM

3 = Manual Safety Belts with Driver and Passenger
Depowered Supplemental Restraint System (SRS)

CHECK DIGIT

To be assigned by Manufacturer.

MODEL YEAR

X = 1999

PLANT OF MANUFACTURE

E = Regensburg, GERMANY

SEQUENTIAL PRODUCTION NUMBER

To be assigned by Manufacturer.

Decipherment of BMW VIN's According to FMVSS 115 and Part 565

Table for M3 Convertible - 1999 Model Year

WBS BK93 3 - X E 000000

WORLD MANUFACTURER IDENTIFIER

WBS = BMW M GmbH
Munich, GERMANY
Passenger Car

VEHICLE DESCRIPTION SECTION

BK93	Line:	3
or	Series:	M3
BK03	Body Type:	2-Door Convertible
	Engine:	240 BHP 192.3 cu. in. (3.152 liter) 6-Cylinder Gasoline Engine
	Mfr:	BMW M GmbH

RESTRAINT SYSTEM

3 = Manual Safety Belts with Driver and Passenger
Depowered Supplemental Restraint System (SRS)

CHECK DIGIT

To be assigned by Manufacturer.

MODEL YEAR

X = 1999

PLANT OF MANUFACTURE

E = Regensburg, GERMANY

SEQUENTIAL PRODUCTION NUMBER

To be assigned by Manufacturer.

Decipherment of BMW VIN's According to FMVSS 115 and Part 565

Table for Z3 roadster 2.3 - 1999 Model Year

4US CH93 3 - X L 000000

WORLD MANUFACTURER IDENTIFIER

4US = BMW MANUFACTURING CORP.
Spartanburg, South Carolina, USA
Passenger Car

VEHICLE DESCRIPTION SECTION

CH93	Line:	Z3
	Series:	Z3 roadster 2.3
	Body Type:	2-Door Convertible
	Engine:	168 BHP 152.2 cu. in. (2.494 liter) 6-Cylinder Gasoline Engine
	Mfr:	BMW MANUFACTURING CORP.

RESTRAINT SYSTEM

3 = Manual Safety Belts with Driver and Passenger
Depowered Supplemental Restraint System (SRS)

CHECK DIGIT

To be assigned by Manufacturer.

MODEL YEAR

X = 1999

PLANT OF MANUFACTURE

L = Greer, South Carolina, USA

SEQUENTIAL PRODUCTION NUMBER

To be assigned by Manufacturer.

Decipherment of BMW VIN's According to FMVSS 115 and Part 565

Table for Z3 roadster 2.8 - 1999 Model Year

4US CH33 3 - X L 000000

WORLD MANUFACTURER IDENTIFIER

4US = BMW MANUFACTURING CORP.
Spartanburg, South Carolina, USA
Passenger Car

VEHICLE DESCRIPTION SECTION

CH33	Line:	Z3
	Series:	Z3 roadster 2.8
	Body Type:	2-Door Convertible
	Engine:	190 BHP 170.4 cu. in. (2.793 liter) 6-Cylinder Gasoline Engine
	Mfr:	BMW MANUFACTURING CORP.

RESTRAINT SYSTEM

3 = Manual Safety Belts with Driver and Passenger
Depowered Supplemental Restraint System (SRS)

CHECK DIGIT

To be assigned by Manufacturer.

MODEL YEAR

X = 1999

PLANT OF MANUFACTURE

L = Greer, South Carolina, USA

SEQUENTIAL PRODUCTION NUMBER

To be assigned by Manufacturer.

Decipherment of BMW VIN's According to FMVSS 115 and Part 565

Table for Z3 coupe 2.8 - 1999 Model Year

4US CK53 3 - X L 000000

WORLD MANUFACTURER IDENTIFIER

4US = BMW MANUFACTURING CORP.
Spartanburg, South Carolina, USA
Passenger Car

VEHICLE DESCRIPTION SECTION

CK53	Line:	Z3
	Series:	Z3 coupe 2.8
	Body Type:	2-Door Hatchback
	Engine:	190 BHP 170.4 cu. in. (2.793 liter) 6-Cylinder Gasoline Engine
	Mfr:	BMW MANUFACTURING CORP.

RESTRAINT SYSTEM

3 = Manual Safety Belts with Driver and Passenger
Depowered Supplemental Restraint System (SRS)

CHECK DIGIT

To be assigned by Manufacturer.

MODEL YEAR

X = 1999

PLANT OF MANUFACTURE

L = Greer, South Carolina, USA

SEQUENTIAL PRODUCTION NUMBER

To be assigned by Manufacturer.

Decipherment of BMW VIN's According to FMVSS 115 and Part 565

Table for M roadster - 1999 Model Year

WBS CK93 3 - X L 000000

WORLD MANUFACTURER IDENTIFIER

WBS = BMW M GmbH
Munich, GERMANY
Passenger Car

VEHICLE DESCRIPTION SECTION

CK93	Line:	Z3
	Series:	M roadster
	Body Type:	2-Door Convertible
	Engine:	240 BHP 192.3 cu. in. (3.152 liter) 6-Cylinder Gasoline Engine
	Mfr:	BMW M GmbH

RESTRAINT SYSTEM

3 = Manual Safety Belts with Driver and Passenger
Depowered Supplemental Restraint System (SRS)

CHECK DIGIT

To be assigned by Manufacturer.

MODEL YEAR

X = 1999

PLANT OF MANUFACTURE

L = Greer, South Carolina, USA

SEQUENTIAL PRODUCTION NUMBER

To be assigned by Manufacturer.

Decipherment of BMW VIN's According to FMVSS 115 and Part 565

Table for M coupe - 1999 Model Year

WBS CM93 3 - X L 000000

WORLD MANUFACTURER IDENTIFIER

WBS = BMW M GmbH
Munich, GERMANY
Passenger Car

VEHICLE DESCRIPTION SECTION

CM93	Line:	Z3
	Series:	M coupe
	Body Type:	2-Door Hatchback
	Engine:	240 BHP 192.3 cu. in. (3.152 liter) 6-Cylinder Gasoline Engine
	Mfr:	BMW M GmbH

RESTRAINT SYSTEM

3 = Manual Safety Belts with Driver and Passenger
Depowered Supplemental Restraint System (SRS)

CHECK DIGIT

To be assigned by Manufacturer.

MODEL YEAR

X = 1999

PLANT OF MANUFACTURE

L = Greer, South Carolina, USA

SEQUENTIAL PRODUCTION NUMBER

To be assigned by Manufacturer.

Decipherment of BMW VIN's According to FMVSS 115 and Part 565

Table for 528i Sedan - 1999 Model Year

WBA DM53 3 - X B 000000

WORLD MANUFACTURER IDENTIFIER

WBA = BMW-AG
Munich, GERMANY
Passenger Car

VEHICLE DESCRIPTION SECTION

DM53	Line:	5
or	Series:	528i
DM63	Body Type:	4-Door Sedan
	Engine:	190 BHP 170.4 cu. in. (2.793 liter) 6-Cylinder Gasoline Engine
	Mfr:	BMW-AG

RESTRAINT SYSTEM

3 = Manual Safety Belts with Driver and Passenger
Depowered Supplemental Restraint System (SRS)

CHECK DIGIT

To be assigned by Manufacturer.

MODEL YEAR

X = 1999

PLANT OF MANUFACTURE

B = Dingolfing, GERMANY

SEQUENTIAL PRODUCTION NUMBER

To be assigned by Manufacturer.

Decipherment of BMW VIN's According to FMVSS 115 and Part 565

Table for 528i Touring - 1999 Model Year

WBA DP53 3 - X B 000000

WORLD MANUFACTURER IDENTIFIER

WBA = BMW-AG
Munich, GERMANY
Passenger Car

VEHICLE DESCRIPTION SECTION

DP53 or DP63	Line:	5
	Series:	540i Touring
	Body Type:	4-Door Wagon
	Engine:	190 BHP 170.4 cu. in. (2.793 liter) 6-Cylinder Gasoline Engine
	Mfr:	BMW-AG

RESTRAINT SYSTEM

3 = Manual Safety Belts with Driver and Passenger
Depowered Supplemental Restraint System (SRS)

CHECK DIGIT

To be assigned by Manufacturer.

MODEL YEAR

X = 1999

PLANT OF MANUFACTURE

B = Dingolfing, GERMANY

SEQUENTIAL PRODUCTION NUMBER

To be assigned by Manufacturer.

Decipherment of BMW VIN's According to FMVSS 115 and Part 565

Table for 540i Sedan - 1999 Model Year

WBA DN53 3 - X B 000000

WORLD MANUFACTURER IDENTIFIER

WBA = BMW-AG
Munich, GERMANY
Passenger Car

VEHICLE DESCRIPTION SECTION

DN53	Line:	5
or	Series:	540i
DN63	Body Type:	4-Door Sedan
	Engine:	282 BHP 268.4 cu. in. (4.398 liter) 8-Cylinder Gasoline Engine
	Mfr:	BMW-AG

RESTRAINT SYSTEM

3 = Manual Safety Belts with Driver and Passenger
Depowered Supplemental Restraint System (SRS)

CHECK DIGIT

To be assigned by Manufacturer.

MODEL YEAR

X = 1999

PLANT OF MANUFACTURE

B = Dingolfing, GERMANY

SEQUENTIAL PRODUCTION NUMBER

To be assigned by Manufacturer.

Decipherment of BMW VIN's According to FMVSS 115 and Part 565

Table for 540i Protection Sedan - 1999 Model Year

WBA DN83 3 - X B 000000

WORLD MANUFACTURER IDENTIFIER

WBA = BMW-AG
Munich, GERMANY
Passenger Car

VEHICLE DESCRIPTION SECTION

DN83	Line:	5
	Series:	540i
	Body Type:	4-Door Sedan
	Engine:	282 BHP 268.4 cu. in. (4.398 liter) 8-Cylinder Gasoline Engine
	Mfr:	BMW-AG

RESTRAINT SYSTEM

3 = Manual Safety Belts with Driver and Passenger
Depowered Supplemental Restraint System (SRS)

CHECK DIGIT

To be assigned by Manufacturer.

MODEL YEAR

X = 1999

PLANT OF MANUFACTURE

B = Dingolfing, GERMANY

SEQUENTIAL PRODUCTION NUMBER

To be assigned by Manufacturer.

Decipherment of BMW VIN's According to FMVSS 115 and Part 565

Table for 540i Touring - 1999 Model Year

WBA DR63 3 - X B 000000

WORLD MANUFACTURER IDENTIFIER

WBA = BMW-AG
Munich, GERMANY
Passenger Car

VEHICLE DESCRIPTION SECTION

DR63	Line:	5
	Series:	540i Touring
	Body Type:	4-Door Wagon
	Engine:	282 BHP 268.4 cu. in. (4.398 liter) 8-Cylinder Gasoline Engine
	Mfr:	BMW-AG

RESTRAINT SYSTEM

3 = Manual Safety Belts with Driver and Passenger
Depowered Supplemental Restraint System (SRS)

CHECK DIGIT

To be assigned by Manufacturer.

MODEL YEAR

X = 1999

PLANT OF MANUFACTURE

B = Dingolfing, GERMANY

SEQUENTIAL PRODUCTION NUMBER

To be assigned by Manufacturer.

Decipherment of BMW VIN's According to FMVSS 115 and Part 565

Table for 740i Sedan - 1999 Model Year

WBA GG83 3 - X D 000000

WORLD MANUFACTURER IDENTIFIER

WBA = BMW-AG
Munich, GERMANY
Passenger Car

VEHICLE DESCRIPTION SECTION

GG83	Line:	7
	Series:	740i
	Body Type:	4-Door Sedan
	Engine:	282 BHP 268.4 cu. in. (4.398 liter) 8-Cylinder Gasoline Engine
	Mfr:	BMW-AG

RESTRAINT SYSTEM

3 = Manual Safety Belts with Driver and Passenger
Depowered Supplemental Restraint System (SRS)

CHECK DIGIT

To be assigned by Manufacturer.

MODEL YEAR

X = 1999

PLANT OF MANUFACTURE

D = Dingolfing, GERMANY

SEQUENTIAL PRODUCTION NUMBER

To be assigned by Manufacturer.

Decipherment of BMW VIN's According to FMVSS 115 and Part 565

Table for 740iL Sedan - 1999 Model Year

WBA GH83 3 - X D 000000

WORLD MANUFACTURER IDENTIFIER

WBA = BMW-AG
Munich, GERMANY
Passenger Car

VEHICLE DESCRIPTION SECTION

GH83	Line:	7
	Series:	740iL
	Body Type:	4-Door Sedan
	Engine:	282 BHP 268.4 cu. in. (4.398 liter) 8-Cylinder Gasoline Engine
	Mfr:	BMW-AG

RESTRAINT SYSTEM

3 = Manual Safety Belts with Driver and Passenger
Depowered Supplemental Restraint System (SRS)

CHECK DIGIT

To be assigned by Manufacturer.

MODEL YEAR

X = 1999

PLANT OF MANUFACTURE

D = Dingolfing, GERMANY

SEQUENTIAL PRODUCTION NUMBER

To be assigned by Manufacturer.

Decipherment of BMW VIN's According to FMVSS 115 and Part 565

Table for 750iL Sedan - 1999 Model Year

WBA GJ03 3 - X D 000000

WORLD MANUFACTURER IDENTIFIER

WBA = BMW-AG
Munich, GERMANY
Passenger Car

VEHICLE DESCRIPTION SECTION

GJ03	Line:	7
	Series:	750iL
	Body Type:	4-Door Sedan
	Engine:	326 BHP 328.2 cu. in. (5.379 liter) 12-Cylinder Gasoline Engine
	Mfr:	BMW-AG

RESTRAINT SYSTEM

3 = Manual Safety Belts with Driver and Passenger
Depowered Supplemental Restraint System (SRS)

CHECK DIGIT

To be assigned by Manufacturer.

MODEL YEAR

X = 1999

PLANT OF MANUFACTURE

D = Dingolfing, GERMANY

SEQUENTIAL PRODUCTION NUMBER

To be assigned by Manufacturer.

A subsidiary of BMW AG

BMW of North America, Inc.

01-022-N11B-7013

October 26, 1998

Ref:A:FW18398

U.S. Department of Transportation
National Highway Traffic Safety Administration
400 Seventh Street, S.W.
Washington, D.C. 20590

Attention: VIN Coordinator

FILE

11P.

Dear Sir/Madam:

This letter is in reference to FMVSS 115 and Part 565. Please find enclosed the information necessary to decipher the characters contained in the Vehicle Identification Numbers (VINs) of the following 1999 U.S. BMW motorcycles:

F650	R1100RT
F650S	R1100GS
R850R	K1200LT
R1100R	K1200RS
R1100RS	R1200C

Sincerely,

Karl-Heinz Ziwica
General Manager
Environmental Engineering

Enclosures

Headquarters
300 Chestnut Ridge Road
Woodcliff Lake, NJ 07675

Mailing Address
BMW Plaza
Montvale, NJ 07645

Telephone
(201) 307-4000

Facsimile
(201) 782-0764

Printed on Recycled Paper

Decipherment of BMW Motorcycle VIN's According to FMVSS 115 And Part 565

Table for F650 - 1999 Model Year

WB1 0166 A - X X 000000

World Manufacturer Identifier

WB1 = BMW AG Motorcycles, Munich / Germany

Vehicle Description Section

Type of motorcycle:	Two-wheel
Line:	169
Engine type:	1-cylinder gasoline engine, 39.8 cu.in., 4-stroke

Engine Power

A = 35 kW (48 BHP)

Check Digit

To be assigned by manufacturer.

Model Year

X = 1999

Plant of Manufacture

X = Aprilia, Italy

Sequential Production Number

To be assigned by manufacturer.

Decipherment of BMW Motorcycle VIN's According to FMVSS 115 And Part 565

Table for F650S - 1999 Model Year

WB1 0168 A - X X 000000

World Manufacturer Identifier

WB1 = BMW AG Motorcycles, Munich / Germany

Vehicle Description Section

Type of motorcycle:	Two-wheel
Line:	169
Engine type:	1-cylinder gasoline engine, 39.8 cu.in., 4-stroke

Engine Power

A = 35 kW (48 BHP)

Check Digit

To be assigned by manufacturer.

Model Year

X = 1999

Plant of Manufacture

X = Aprilia, Italy

Sequential Production Number

To be assigned by manufacturer.

Decipherment of BMW Motorcycle VIN's According to FMVSS 115 And Part 565

Table for R850R - 1999 Model Year

WB1 0406 A - X Z 000000

World Manufacturer Identifier

WB1 = BMW AG Motorcycles, Munich / Germany

Vehicle Description Section

Type of motorcycle:	Two-wheel
Line:	R259
Engine type:	2-cylinder gasoline engine, 51.7 cu.in., 4-stroke

Engine Power

A = 52 kW (71 BHP)

Check Digit

To be assigned by manufacturer.

Model Year

X = 1999

Plant of Manufacture

Z = Berlin, Germany

Sequential Production Number

To be assigned by manufacturer.

Decipherment of BMW Motorcycle VIN's According to FMVSS 115 And Part 565

Table for R1100GS - 1999 Model Year

WB1 0409 B - X Z 000000

World Manufacturer Identifier

WB1 = BMW AG Motorcycles, Munich / Germany

Vehicle Description Section

Type of motorcycle:	Two-wheel
Line:	R259
Engine type:	2-cylinder gasoline engine, 66.2 cu.in., 4-stroke

Engine Power

B = 59 kW (80 BHP)

Check Digit

To be assigned by manufacturer.

Model Year

X = 1999

Plant of Manufacture

Z = Berlin, Germany

Sequential Production Number

To be assigned by manufacturer.

Decipherment of BMW Motorcycle VIN's According to FMVSS 115 And Part 565

Table for R1100R - 1999 Model Year

WB1 0407 B - X Z 000000

World Manufacturer Identifier

WB1 = BMW AG Motorcycles, Munich / Germany

Vehicle Description Section

Type of motorcycle:	Two-wheel
Line:	R259
Engine type:	2-cylinder gasoline engine, 66.2 cu.in., 4-stroke

Engine Power

A = 59 kW (80 BHP)

Check Digit

To be assigned by manufacturer.

Model Year

X = 1999

Plant of Manufacture

Z = Berlin, Germany

Sequential Production Number

To be assigned by manufacturer.

Decipherment of BMW Motorcycle VIN's According to FMVSS 115 And Part 565

Table for R1100RS - 1999 Model Year

WB1 0416 A - X Z 000000

World Manufacturer Identifier

WB1 = BMW AG Motorcycles, Munich / Germany

Vehicle Description Section

Type of motorcycle:	Two-wheel
Line:	R259
Engine type:	2-cylinder gasoline engine, 66.2 cu.in., 4-stroke

Engine Power

A = 66 kW (90 BHP)

Check Digit

To be assigned by manufacturer.

Model Year

X = 1999

Plant of Manufacture

Z = Berlin, Germany

Sequential Production Number

To be assigned by manufacturer.

Decipherment of BMW Motorcycle VIN's According to FMVSS 115 And Part 565

Table for R1100RT - 1999 Model Year

WB1 0418 A - X Z 000000

World Manufacturer Identifier

WB1 = BMW AG Motorcycles, Munich / Germany

Vehicle Description Section

Type of motorcycle:	Two-wheel
Line:	R259
Engine type:	2-cylinder gasoline engine, 66.2 cu.in., 4-stroke

Engine Power

A = 66 kW (90 BHP)

Check Digit

To be assigned by manufacturer.

Model Year

X = 1999

Plant of Manufacture

Z = Berlin, Germany

Sequential Production Number

To be assigned by manufacturer.

Decipherment of BMW Motorcycle VIN's According to FMVSS 115 And Part 565

Table for K1200LT - 1999 Model Year

WB1 0555 A - X Z 000000

World Manufacturer Identifier

WB1 = BMW AG Motorcycles, Munich / Germany

Vehicle Description Section

Type of motorcycle:	Two-wheel
Line:	K589
Engine type:	4-cylinder gasoline engine, 71.5 cu.in., 4-stroke

Engine Power

A = 72 kW (98 BHP)

Check Digit

To be assigned by manufacturer.

Model Year

X = 1999

Plant of Manufacture

Z = Berlin, Germany

Sequential Production Number

To be assigned by manufacturer.

Decipherment of BMW Motorcycle VIN's According to FMVSS 115 And Part 565

Table for K1200RS - 1999 Model Year

WB1 0554 A - X Z 000000

World Manufacturer Identifier

WB1 = BMW AG Motorcycles, Munich / Germany

Vehicle Description Section

Type of motorcycle:	Two-wheel
Line:	K589
Engine type:	4-cylinder gasoline engine, 71.5 cu.in., 4-stroke

Engine Power

A = 96 kW (130 BHP)

Check Digit

To be assigned by manufacturer.

Model Year

X = 1999

Plant of Manufacture

Z = Berlin, Germany

Sequential Production Number

To be assigned by manufacturer.

Decipherment of BMW Motorcycle VIN's According to FMVSS 115 And Part 565

Table for R1200C - 1999 Model Year

WB1 0434 A - X Z 000000

World Manufacturer Identifier

WB1 = BMW AG Motorcycles, Munich / Germany

Vehicle Description Section

Type of motorcycle:	Two-wheel
Line:	R259
Engine type:	2-cylinder gasoline engine, 71.4 cu.in., 4-stroke

Engine Power

A = 45 kW (1 BHP)

Check Digit

To be assigned by manufacturer.

Model Year

X = 1999

Plant of Manufacture

Z = Berlin, Germany

Sequential Production Number

To be assigned by manufacturer.

CAGIVA Motor S.p.A.

01-022-N11B-7014

15 th October, 1998

Data

Vostro Riferimento

Nostro Riferimento

Oggetto

Administrator
National Highway Traffic Safety Administration
400 Seventh Street, S.W.
Washington, D.C. 20590

FILE

Subject: Cagiva Motor S.p.A. VIN decode
Additions to VIN decode dated 4 th September, 1998

Dear Administrator
this letter to add new items to previous VIN decode dated 4 th September 1998.

Annexed is the new VIN decode with new codes indicated with ●, so You can immediately realize which items have been added.

With kindest regards

Luigi Giacometti
Commercial Director

EXECUTIVE SECRETARIAT
1998 NOV -5 PM 4:20
NATIONAL HIGHWAY TRAFFIC SAFETY ADMIN.

Cagiva Motor S.p.A.
Via G. Macchi 144 (Schiranna)
21100 Varese, Italy
Telefono 0332 254 [illegible] (15 linee)
Fax 0332 329378

Sede legale: Varese
Cap Soc. [illegible]

15 th October, 1998

Vostro Riferimento

Nostro Riferimento

Oggetto

Administrator
National Highway Traffic Safety Administration
400 Seventh Street, S.W.
Washington, D.C. 20590

Cagiva Motor S.p.A. VIN decode

Submittal required by 49 CFR 565.7(b)

Position 1, 2, 3

Manufacturer's WMI ..... **Z C G**

Position 4, 5, 6, 7, 8

4 - Motorcycle Type ..... **see table 1**
5 - Model ..... **see table 2**
6 - Engine Type..... **see table 3**
7 - Engine Displacement [cm^3] ..... **see table 4**
8 - Net Brake Horse Power [HP] ..... **see table 5**

Position 9

Check Digit ..... **calculated**

Position 10

Model Year..... **see table 6**

Position 11

Location of Plant of manufacture ..... **see table 7**

Position 12, 13, 14, 15, 16, 17

Sequential production Serial Numbers ..... **see table 8**

Cagiva Motor S.p.A.
via G Macchi 44 (Sanremo)
21100 Varese (Italy)
Telefono 0332 254 [illegible]
Fax 0332 329375

Sede legale: [illegible]

Table 1. Pos. 4 - Motorcycle Type.

	4 -	Description
	A	On-road Motorcycles
	B	Enduro Motorcycles
	C	Off-road and competition Motorcycles
	D	Trial Motorcycles
●	E	Dual Purpose Motorcycles

Table 2. Pos. 5 - Model.

	4 -	5 -	Description
	A	A	SST
	A	B	WSST
	A	C	TL
	A	D	CANYON
	A	E	GRAN CANYON
●	A	F	SM
●	A	G	F4
●	A	H	MITO
	B	A	WSXT
	B	B	SXT
	C	A	WRX
	C	B	WMX
	C	C	WSST-R
	D	A	TR
●	E	A	TE E

Table 3. Pos. 6 - Engine Type.

	6 -	Description
	A	2 Stroke, 1 Cylinder, Gasoline feeding with separate oil mix, air cooled
	B	2 Stroke, 1 Cylinder, Gasoline feeding with separate oil mix, liquid cooled
	C	4 Stroke, 1 Cylinder, Gasoline feeding, air cooled
	D	4 Stroke, 2 Cylinders 90°, Gasoline feeding, air cooled
●	E	4 Stroke, 1 Cylinder, Gasoline feeding, liquid cooled
●	F	4 Stroke, 4 Cylinders in line, Gasoline feeding, liquid cooled

Table 4. Pos. 7 - Engine Displacement [cm^3].

7 -	Value
A	125
B	200
C	250
D	350
E	400
F	650
G	1000
H	500
J	900
● K	600
● L	750
● M	50

Table 5. Pos. 8 - Net Brake Horse Power [HP].

8 -	Value
A	15
B	17
C	20
D	27
E	36
F	50
G	58
H	73
● J	126
● K	2

Table 6. Pos. 10 - Model Year

A	1980	**V**	1997
B	1981	**W**	1998
C	1982	**X**	1999
D	1983	**Y**	2000
E	1984	**1**	2001
F	1985	**2**	2002
G	1986	**3**	2003
H	1987	**4**	2004
J	1988	**5**	2005
K	1989	**6**	2006
L	1990	**7**	2007
M	1991	**8**	2008
N	1992	**9**	2009
P	1993	**A**	2010
R	1994	**B**	2011
D	1995	**C**	2012
T	1996		

Table 7. Pos. 11 - Model Year Location of Plant of manufacture.

	11 -	**Location**
	V	Varese (Italy)
●	**E**	Espagna

Table 7. Pos. 12 to 17 - Sequential production Serial Numbers.

	12 to 17	**Model**
	010000	CANYON
	020000	GRAN CANYON
●	100000	F4
●	200000	MITO
●	300000	TE E
●	400000	SM

Signed: .....

Luigi Giacometti
Commercial Director

01-022-NHB-7015

NSA

CHRYSLER CORPORATION

Susan M Cischke
Executive Director
Vehicle Certification Compliance & Safety Affairs

October 26, 1998

FILE

The Honorable Ricardo Martinez, M.D. Administrator
National Highway Traffic Safety Administration
400 Seventh Street SW
Washington, DC 20590
Attention: VIN Coordinator

Re: Part 565 - Vehicle Identification Number

Dear Dr. Martinez:

Enclosed are five copies of our **2000 Model Year** VIN decoding table applicable to 2000 model year Chrysler passenger cars offered for sale in the United States, Canada and Mexico.

The tables are submitted in accordance with the requirements in Section 565.5 of Part 565 "Vehicle Identification Number - Content Requirements".

Sincerely,

R.H. Goldenthal for Sue Cischke

S. M. Cischke
Executive Director
Vehicle Certification, Compliance & Safety Affairs

Enclosures

p:\vc&sa\group\vin\00my-ini.ltr

EXECUTIVE SECRETARIAT
1998 OCT 28 PM 3:14
NATIONAL HIGHWAY TRAFFIC SAFETY ADMIN.

Chrysler Corporation CIMS 482-00-91
800 Chrysler Drive
Auburn Hills MI 48326-2757
248 576 7301 FAX 248 576 7321
smc16@chrysler.com

CHRYSLER CORPORATION V.I.N. DECODING GUIDE

REV LTR	VEHICLE IDENTIFICATION NUMBER												
	W.M.I.			V.D.S.						V.I.S.			**PASSENGER CAR** **2000 MODEL YEAR**
	COUNTRY	MAKE	VEH TYPE	RESTRAINT	LINE	SERIES	BODY	ENGINE	CH DIGIT	YEAR	PLANT	SEQ NO	
	1	2	3	4	5	6	7	8	9	10	11	12-17	
	1												Built by Chrysler Corporation
	2												Built by Chrysler Canada Ltd.
	3												Built by Chrysler de Mexico
		B											Dodge
		C											Chrysler
		P											Plymouth
			3										Passenger Car
				A									Restraint Sys. Active Front & Side Air Bags
				B									Restraint Sys. Manual/Active Uni-Belt (CGA)
				D									Restraint System W/O Air Bags (CGJ)
				E									Restr Sys Active Drvr & Pass Air Bag (CGW Except LH)
				H									Restraint Sys Active Drvr & Pass Air Bag (CGW-LH)
		C	3										CHRYSLER:
					D								Concorde
					H								Intrepid (Canada & Mexico)
					J								Cirrus
					L								Sebring Convertible (U.S./Canada)
					C								LHS
					E								300M

Issued: 10/21/98	**Changes this issue:**
Page 1	

2

REV LTR	VEHICLE IDENTIFICATION NUMBER												
	W.M.I.			V.D.S.						V.I.S.			PASSENGER CAR 2000 MODEL YEAR
	COUNTRY	MAKE	VEH TYPE	RESTRAINT	LINE	SERIES	BODY	ENGINE	CH DIGIT	YEAR	PLANT	SEQ NO	
	1	2	3	4	5	6	7	8	9	10	11	12-17	
	B	3											DODGE:
					R								Viper (U.S./Canada)
					D								Intrepid
					J								Stratus (U.S./Canada)
					S								Neon
	P	3											PLYMOUTH:
					J								Breeze
					S								Neon
					W								Prowler
													SERIES:
						1							E Series
						2							L Series
						3							M Series
						4							H Series
						5							P Series
						6							S Series
						7							X Series

Issued: 10/21/98	Changes this issue:
Page 2	

3

REV LTR	VEHICLE IDENTIFICATION NUMBER												
	W.M.I.			V.D.S.						V.I.S.			PASSENGER CAR 2000 MODEL YEAR
	COUNTRY	MAKE	VEH TYPE	RESTRAINT	LINE	SERIES	BODY	ENGINE	CH DIGIT	YEAR	PLANT	SEQ NO	
	1	2	3	4	5	6	7	8	9	10	11	12-17	

												SERIES BY MODEL: CHRYSLER (LH)
					4							Concorde LX/LXi
					4							Intrepid (Canada)
					5							Intrepid `ES' (Canada)
					5							LHS
					6							300M
												SERIES BY MODEL: DODGE (LH)
					4							Intrepid (U.S.)
					5							Intrepid `ES' (U.S.)
												SERIES BY MODEL: CHRYSLER (JA/JX)
					5							Cirrus LX/LXi (U.S./Canada)
					4							Sebring (Convertible) JX (U.S./Canada)
					5							Sebring (Convertible) JXi (U.S./Canada)
												SERIES BY MODEL: DODGE (JA)
					4							Stratus (U.S./Canada)
					5							Stratus `ES'
												SERIES BY MODEL: PLYMOUTH (JA)
					4							Breeze/Expresso

Issued: 10/21/98	**Changes this issue:**
Page 3	

4

REV LTR	VEHICLE IDENTIFICATION NUMBER												PASSENGER CAR 2000 MODEL YEAR
	W.M.I.			V.D.S.						V.I.S.			
	COUNTRY	MAKE	VEH TYPE	RESTRAINT	LINE	SERIES	BODY	ENGINE	CH DIGIT	YEAR	PLANT	SEQ NO	
	1	2	3	4	5	6	7	8	9	10	11	12-17	
													SERIES BY MODEL: DODGE (PL)
						2							Neon
						4							Neon/Sport/RT
													SERIES BY MODEL: PLYMOUTH (PL)
						4							Neon/Expresso
													SERIES BY MODEL: PLYMOUTH (PR)
						6							Prowler
													SERIES BY MODEL: DODGE (SR)
						6							Viper RT/10 (U.S./Canada)
						6							Viper `GTS' Coupe (U.S./Canada)
							4						2 dr. Hatchback - Body Style (24)
							5						2 dr. Convertible /Open Body - Body Style (27)
							6						4 dr. Sedan - Body Style (41)
							7						4 dr. Pillared Hardtop - Body Style (42)
							9						2 dr. Specialty Coupe - Body Style (29)
								A					1.8L 4 CYL 16V SOHC Gasoline (SFI) (EBD)
								B					2.0L 4 CYL 16V DOHC High Performance (ECM)
								C					2.0L 4 CYL 16V Gasoline (SFI) SOHC (ECB)

Issued: 10/21/98	Changes this issue:
Page 4	

5

01-022-N11B-7016

Classic Trailers, Inc.
PO Box 652
Marsing, Id. 83639

208-896-6006 John Allen
208-896-5141 Vern Cobb

FILE

Attn: Mr. Oris Younger

Re: Enclosed please find the information you requested.

Position:

1. 1=WMI
2. C=WMI
3. 9=WMI
4. B= BUMPER PULL G= GOOSENECK, TRAILER TYPE
5. H= HORSE TRAILER S= STOCK TRAILER, BODY TYPE
6. OVERALL LENGTH OF TRAILER
7. OVERALL LENGTH OF TRAILER
8. 1= (1) AXLE 2=(2) AXLES, NUMBER OF AXLES
9. CHECK DIGIT
10. MODEL YEAR
11. M= MARSING, ID. PLANT LOCATION
12. 7= ASSIGNED BY SAE
13. 1= ASSIGNED BY SAE
14. 8= ASSIGNED BY SAE
15. PRODUCTION SEQUENCE NUMBER
16. PRODUCTION SEQUENCE NUMBER
17. PRODUCTION SEQUENCE NUMBER

SAE The Engineering Society For Advancing Mobility Land Sea Air and Space®
INTERNATIONAL

Registration authority for ISO 3780

The Society of Automotive Engineers has been appointed by ISO to act as registration authority for the implementation of International Standard ISO 3780.

400 COMMONWEALTH DRIVE, WARRENDALE, PA 15096-0001 U.S.A.
Phone. (724) 772-8511 Fax No. (724) 776-0243
E-Mail: douds@sae.org
Web: http://www.sae.org

November 4, 1998

JOHN ALLEN
CLASSIC TRAILERS, INC.
HC 81
PO BOX 652
MARSING, ID 83639

Dear JOHN ALLEN:

This letter confirms the assignment of a World Manufacturer (Maker) Identifier (WMI) Code. As the agent of the NHTSA for the assignment of manufacturer identifiers pursuant to CFR 49 Part 565 Vehicle Identification Number Requirements (VIN), we are confirming the following code:

CLASSIC TRAILERS, INC.
HC 81
PO BOX 652
MARSING, ID 83639
UNITED STATES

1 C 9 with the 12th, 13th, and 14th characters of the WMI Code to be 7 1 8

HORSE & LIVESTOCK TRAILERS

Should your company name and/or the ownership of your company change, or your address or your phone number change, please be sure to notify us as soon as possible.

If you have any questions concerning the construction of this WMI Code, you may call the National Highway Traffic Safety Administration at 202/366-6018 or fax 202/366-3081.

Sincerely,

Cathy Douds
WMI Coordinator

Enclosure

cc: VIN Coordinator

2

01-022-N11B-7017

COUNTRY COACH INC

THE WORLD'S FINEST MOTORCOACHES

FILE

9-1-95
AMENDED 10-26-98

NATIONAL HIGHWAY TRAFFIC SAFETY ADMINISTRATOR
ATTN: VIN COORDINATOR, NAM-15, RM 5320
400 7TH STREET SW
WASHINGTON, D.C. 20590

ATTN: CATHY DOUDS

4p.

DEAR ADMINISTRATOR:

ENCLOSED PLEASE FIND AMENDED VIN SCHEME EFFECTIVE 1-1-98.

SINCERELY,

DAVE DIAMOND
CHIEF ENGINEER & QUALITY ASSURANCE
COUNTRY COACH, INC.

CC: BOB LEE, CEO
DON FULTS, NATIONAL WHOLESALE MANAGER

Corporate Office/
Prevost Sales Support
(541)998-3720
(800)547-8015
Fax: (541)998-6687

Motorcoach Sales Support
(541)998-3001
(800)654-0223
Fax: (541)998-8710

Parts & Service
(541)998-9202
(800)452-8015
Fax: (541)998-5161

PO Box 400
135 East First Avenue
Junction City, OR 97448

www.countrycoach.com

COUNTRY COACH INC

THE WORLD'S FINEST MOTORCOACHES

COUNTRY COACH, INC.

- VIN SCHEME -

4U7	A	4	D	F	1	5	S	1	100,000
1	2	3	4	5	6	7	8	9	10

1. DESIGNATES CHASSIS MANUFACTURER — 4U7 - COUNTRY COACH, INC

2. DESIGNATES MODEL LINE
   - A- ALLURE LINE
   - B- INTRIGUE LINE
   - C- MAGNA
   - D- AFFINITY
   - E- CONCEPT
   - F- ISLANDER

3. DESIGNATES GVWR (GROSS VEHICLE WEIGHT RATING IN POUNDS)
   - 1- 10,001-14,000lbs
   - 2- 14,001-16,000lbs
   - 3- 16,001-19,500lbs
   - 4- 19,501-26,000lbs
   - 5- 26,001-33,000lbs
   - 6- 33,001-38,000lbs
   - 7- 38,001-43,000lbs
   - 8- 43,001-48,000lbs
   - 9- 48,001-53,000lbs

4. DESIGNATE WHEEL BASE
   - A- 100"-136"
   - B- 137"-173"
   - C- 174"-210"
   - D- 211"-247"
   - E- 248"-284"
   - F- 285"-321"
   - G- 322"-358"
   - H- OPTION

Corporate Office/
Prevost Sales Support
(541)998-3720
(800)547-8015
Fax: (541)998-6687

Motorcoach Sales Support
(541)998-3001
(800)654-0223
Fax: (541)998-8710

Parts & Service
(541)998-9202
(800)452-8015
Fax: (541)998-5161

PO Box 400
135 East First Avenue
Junction City, OR 97448

www.countrycoach.com

2

COUNTRY COACH INC

THE WORLD'S FINEST MOTORCOACHES

5. DESIGNATES ENGINE MANUFACTURER/MODEL

A- CUMMINS 6BRA 5.9L 175 HP
B- CUMMINS 6BTA 5.9L 190 HP
C- CUMMINS 6BTA 5.9L 210 HP
D- CUMMINS 6BTA 5.9L 230 HP
E- CUMMINS 6CTA 8.3L 250 HP
F- CUMMINS 6CTA 8.3L 275 HP
G- CUMMINS 6CTA 8.3L 300 HP
H- CUMMINS 6CTA 8.3L 325 HP
J- CUMMINS ISC 8.3L 330 HP
K- CUMMINS ISC 8.3L 350 HP
L- CATERPILLAR C-12 11.9L 425 HP
M- CATERPILLAR C-12 11.9L 455 HP
N- CATERPILLAR C-10 10.3L 385 HP
P- DETROIT DIESEL SERIES 40 8.7L 330 HP
R- DETROIT DIESEL SERIES 60 12.7L 500 HP
U- DETROIT DIESEL

6. DESIGNATES BRAKE SYSTEM

1- AIR
2- HYDRAULIC
3- AIR/HYDRAULIC

7. DESIGNATES CHECK DIGIT

CALCULATED

8. DESIGNATES MODEL YEAR

P= 1993	1= 2001
R= 1994	2= 2002
S= 1995	3= 2003
T= 1996	4= 2004
V= 1997	5= 2005
W= 1998	6= 2006
X= 1999	7= 2007
Y= 2000	8= 2008

9. DESIGNATES MANUFACTURING PLANT LOCATION

1- COUNTRY COACH, INC. JUNCTION CITY, OREGON
2- OPTION

Corporate Office/
Prevost Sales Support
(541)998-3720
(800)547-8015
Fax: (541)998-6687

Motorcoach Sales Support
(541)998-3001
(800)654-0223
Fax: (541)998-8710

Parts & Service
(541)998-9202
(800)452-8015
Fax: (541)998-5161

PO Box 400
135 East First Avenue
Junction City, OR 97448

www.countrycoach.com

COUNTRY COACH INC

THE WORLD'S FINEST MOTORCOACHES

10. DESIGNATES CHASSIS SERIAL NUMBER

100,000-299,999
CHASSIS LINE

300,000-499,999
OPTION

500,000-699,999
OPTION

700,000-899,999
OPTION

900,000-BEYOND
OPTION

Corporate Office/
Prevost Sales Support
(541)998-3720
(800)547-8015
Fax: (541)998-6687

Motorcoach Sales Support
(541)998-3001
(800)654-0223
Fax: (541)998-8710

Parts & Service
(541)998-9202
(800)452-8015
Fax: (541)998-5161

PO Box 400
135 East First Avenue
Junction City, OR 97448

www.countrycoach.com

4

01-022-N11B-7018

DIAMONDBACK TRAILER MANUFACTURE
4300 E. Loop 820 S.
Fort Worth, Texas 76119

October 20, 1998

FILE

1 P.

Administrator
National Highway Traffic Safety Administration
400 Seventh Street, SW
Washington, DC 20590
Attn: VIN Coordinator

Subject: VIN Decoding Information for DIAMONDBACK TRAILER MANUFACTURE

In accordance with §565.7(c) of 49 CFR Part 565, **Vehicle Identification Number**, DIAMONDBACK TRAILER MANUFACTURE hereby submits Vehicle Identification Number (VIN) decoding information.

VIN POSITION:	DESCRIPTION:	CODES:
1,2 & 3	WMI	1 D 9
4	Trailer Type	U = Utility C = Car Hauler
5	Body Type	S = Standard P = Custom/Special
6 & 7	Length of Trailer (all lengths rounded to nearest foot)	25 = 25 Feet Long 05 = 05 Feet Long
8	Number of Axles	3 = 3 Axles 4 = 4 Axles
9	Check Digit	Calculate -SEE 49 CFR 565.4
10	Model Year	W = 1998 X = 1999
11	Plant Location	F = Fort Worth
12, 13 & 14	WMI	3,8,9
15, 16 & 17	Sequential Production Number	001 002

EUROPA
INTERNATIONAL, INC.

U.S. Distributor for the 4WD Gelaendewagen
Made by Mercedes-Benz

NSA

01-022-N11B-7019

EXECUTIVE SECRETARIAT
1998 NOV -2 PM 12:01
NATIONAL HIGHWAY TRAFFIC SAFETY ADMIN.

October 20, 1998

FILE

Administrator
National Highway Traffic Safety Administration
400 Seventh St. SW
Washington, D.C. 20590
Attention: VIN Coordinator

3p.

RE: VIN Information pursuant to 49 CFR 565.7

Dear Sir or Madam:

In accordance with 49 CFR 565.7, Europa International, Inc. (the U.S. importer/certifier of Gelaendewagen vehicles) hereby furnishes information necessary to decipher the characters contained in U.S. VINs for Gelaendewagen vehicles constructed in Europe by Mercedes-Benz.

Sincerely,
EUROPA INTERNATIONAL, INC.

By: _____
David T. Holland, President

1998 OCT 28 AM 10:01
NATIONAL HIGHWAY TRAFFIC SAFETY ADMIN.
EXECUTIVE SECRETARIAT

Data\Dave\Corres\NHTSA-vinlet.doc

2586 Camino Entrada, Santa Fe, NM 87505 • phone (505) 984-8888 • fax (505) 471-6191 • e-mail: europa@gwagen.com

Gelaendewagen VIN Explanation
AS PER 49 CFR PART 565

FIRST SECTION (3 characters)

Characters 1 – 3 = uniquely identify manufacturer, make and type (constructed by Mercedes-Benz; US certified by Europa International, Inc. per agreement with Mercedes-Benz)

"WDB"

SECOND SECTION (5 characters)

Characters 4 – 8 = uniquely identify attributes of the vehicle

Character 4 – (must be letter) GVWR:
"E" (per table II, part 565)

5 – (must be letter) vehicle line
(Gwagen)
"G"

6 – engine:
(Gasoline V8)
"4"

7 - body type
(station wagen long or short)
"2"
(Cabrio)
"0"

8 – series – wheelbase:
(long)
"1"
(short)
"0"
(Cabrio)
"6"

THIRD SECTION (1 character)

Character 9 – check digit
(as per formula)

FOURTH SECTION (8 characters)

Character 10 – model year
(1999)
"X"

Character 11 – plant of manufacture
(Graz)
"7" (Note: No other U.S. Mercedes-Benz vehicle has "7" in its 11th position of a U.S. VIN)

Characters 12-17 – sequential production number
"000001"

Example (silver G500 test vehicle):

Factory chassis number: WDB46342117112081

Europa VIN: WDBEG4215X7112081

01-022-N11B-7020

FAB TEC Inc.

P.O. Box 8006
Moscow, ID 83843-0506
(208) 883-8433
FAX 208-882-3277

FILE

Administrator
National Highway Traffic Safety Administration
400 Seventh Street, SW
Washington, DC 20590
Attn: VIN Coordinator

Subject: VIN Decoding Information for **FAB TEC, INC.**

In accordance with §565.7(c) of 49 CFR Part 565, *Vehicle Identification Number,* **FAB TEC, INC.**, hereby submits Vehicle Identification Number (VIN) decoding information.

VIN POSITION:	**DESCRIPTION:**	**CODES:**
1, 2 & 3	WMI	1F9
4	Trailer Type	S=Straight frame
5	Body Type	C=Crusher S=Screening Trailer
6 & 7	Length of Trailer Rounded to nearest foot	50=50
8	Number of Axles	2=2 Axles 3=3 Axles 4=4 Axles
9	Check Digit	Calculate-SEE 49 CFR 565.4
10	Model Year	W=1998 X= 1999
11	Plant Location	M=Moscow, ID
12, 13, & 14	WMI	200
15, 16 & 17	Sequential Production Number	001 002

1

01-022-N11B-7021 NSF

FEATHERLITE® VOGUE

FILE

A DIVISION OF FEATHERLITE, INC.

October 28, 1998

Administrator
National Highway Traffic Safety Administration
400 Seventh Street, SW
Washington, DC 20590

Attn: VIN Coordinator

Subject: VIN Decoding information for Featherlite, Inc. - Vogue Division

EXECUTIVE SECRETARIAT
1998 NOV 10 AM 10: 35
NATIONAL HIGHWAY TRAFFIC SAFETY ADMIN.

In accordance with Sec. 565.7(c) of 49 CFR Part 565, *Vehicle Identification Number*, Featherlite, Inc. Vogue Division hereby submits Vehicle Identification Number (VIN) decoding information.

VIN POSITION	DESCRIPTION	CODES
1, 2 & 3	WMI	1F9
4	Vehicle Type	A=Class A Motorhome
5	Model	1=Featherlite Vogue 5000 2=Featherlite Vogue 5000S
6	Length	A=38' B=40' C=42' D=45'
7	Engine	A=Caterpillar C-12 B=Detroit Diesel Series 60 C=Caterpillar C-10 D=Cummins M11 E=Caterpillar 3406
8	Transmission	1=Allison HD4060 2=Allison MD3060
9	Check Digit	Calculate - See 49 CFR 565.4
10	Model Year	W=1998 X=1999 Y=2000 1=2001 2=2002
11	Plant Location	P=Pryor, Oklahoma
12,13 & 14	WMI	199
15, 16 & 17	Sequential Production Number	001 002

98 10 25

4½ Miles S. Hwy. 69 ▪ P.O. Box 339 ▪ Pryor, OK 74362 ▪ Phone: 918-825-7000 ▪ FAX: 918-825-2105 ▪ 1-800-237-8978

01-022-N11B-7022

ORIS

FREIGHTLINER CORPORATION

October 23, 1998

FILE

National Highway Traffic Safety Administration
Attention: VIN Coordinator, Room 5321
400 Seventh Street SW
Washington, DC 20590

Subject: **Amended VIN Coding**

In accordance with Part 565.7, Freightliner Submits the following VIN deciphering information.

2p.

Page 7, VIN positions 6 and 7, Engine, new code (these codes were left off)

Code	Displacement	Configuration	Horsepower	Fuel
7W	14.9 liters	I-6	496-605	Diesel
3A	4.25 liters	I-4	185-224	Diesel
6B	6.0 liters	I-6	225-275	Diesel
6C	6.0 liters	I-6	276-335	Diesel

I am also sending you a new page 7 that has these updates .
You may call me at (503) 735-8063 or fax at (503) 735-6800 if more information is needed.

Sincerely,

Bob Johnson

Bob Johnson
Compliance Analyst

Certified Mail No: P 335 662 596

EXECUTIVE SECRETARIAT
1998 NOV -2 PM 12: 08
NATIONAL HIGHWAY TRAFFIC SAFETY ADMIN.

FREIGHTLINER CORPORATION

VIN CODING SUMMARY

Freightliner, American LaFrance, FCCC, Sterling

Engine – *Positions 6 & 7*

Code	Engine	Horsepower
AY	NTC/N14	207-251
BD	OM447	353-407
BE	OM447	408-495
BX	OM447	288-352
BY	NTC/N14	254-310
CX	S-60, 11.1L	315-385
DY	NTC/N14	389-475
DZ	N14	476-580
EB	C-10/3176J	225-275
EC	C-10/3176J	276-335
ED	C-10/3176	336-407
F4	B5.9propane	185-224
FA	B5.9/ISB	185-224
FB	B5.9/ISB	225-275
FH	B5.9/ISB	153-184
FV	B5.9n.gas	126-152
FH	B5.9n.gas	185-224
GA	OM366LA	185-224
GB	OM366LA	225-275
GF	OM366LA	153-184
HB	S50	225-275
HC	S50	276-335
JA	CFE/3126	185-224
JB	CFE/3126	225-275
JC	CFE/3126	276-335
JF	CFE/3126	153-184
KY	L10	225-275
LA	C8.3/ISC	185-224
LB	C8.3/ISC	225-276
LC	C8.3/ISC	276-335
LD	L10	336-407
LE	ISC	336-407
LL	C8.3 n.gas	225-276
LY	L10	276-330

Code	Engine	Horsepower
MC	M11/ISM	276-335
MD	M11/ISM	336-407
PY	S-60,11.1L	275-330
RY	3406	270-330
SE	S60,12.7L	408-495
SY	3406	333-407
SZ	S60,12.7L	496-605
TD	Series 55	336-407
TE	Series 55	408-495
TJ	V-8 gasoline	207-253
TR	V-10 gasoline	270-330
TY	3408	383-467
UY	3306	225-275
VY	3406	225-269
WD	C-12/3176L	336-407
WE	C-12/3176L	408-495
WY	3306	276-335
XY	3406	408-495
XZ	3406	496-605
YY	S-60,11.1L	225-274
ZY	S-60,12.7L	333-407
1B	6L-71	225-275
1C	6L-71	276-335
2W	S60,14.0L	496-605
3A	MB904	185-224
4Y	6V-92	239-287
5Y	6V-92	288-352
6B	MB906	225-275
6C	MB906	276-335
6Y	8V-92	365-446
7W	cum signature	496-605
8Y	8V-92	302-364
9Y	8V-92	447-522
0Y	No Engine	-

GVWR - *Position 8*

Code	GVWR - pounds	GVWR - kilograms
A	26,001 to 33,000	11,794 to 14,968
B	33,001 and over	14,969 and over
C	19,501 to 26,000	8,846 to 11,793
D	16,001 to 19,500	7,258 to 8,845
2	6,001 to 10,000	2,722 to 4,535
3	10,001 to 14,000	4,536 to 6,350
4	14,001 to 16,000	6,351 to 7,257
9	N/A - incomplete vehicle or	N/A - incomplete vehicle or

01-022-N11B-7023 NSA

Forest River, Inc.

3010 College Ave., P.O. Box 124, Goshen, Indiana 46527 • 219-533-5934 • Fax 219-533-6085

EXECUTIVE SECRETARIAT
1998 NOV 10 AM 10: 35
NATIONAL HIGHWAY TRAFFIC SAFETY ADMIN.

FILE

3pr

Administrator, National Highway Traffic
Safety Administration
400 Seventh St., SW.
Washington, D.C. 20590
Attention: Vin Coordinator
10/29/98

Dear Sir,
Forest River, Inc. 3010 College Ave., Goshen, In 46527 has moved our Continental Cargo and Cargo Mate to a new address.

CODE = 4X4
CHARACTER = 1 2 3 4 5 6 7 8 9 10 11 12 13 14 15 16 17

CHARACTER POSITION	CODE CHARACTER	CODE MEANING
1,2 & 3	4 X 4	World Manufacturer Identifier Forest River, Inc.
4	T	TRAVEL TRAILER
	F	FIFTH WHEEL
	C	TENT CAMPER
	S	SLIDE IN TRUCK CAMPER
	U	UTILITY TRAILERS
5 & 6	AP	AUTO PLUS
	AM	AUTO MASTER
	CA	CARDINAL TOWABLES
	CC	CONTINENTAL CARGO
	CR	CORSICA TOWABLES
	CK	CHEROKEE
	CM	CARGO MATE
	EL	ELIMINATOR
	EX	EXPRESS
	FD	FOREST LODGE TRAILER
	FL	FLAGSTAFF LITE WEIGHT TRAILERS
	FM	FREEDOM CAMPING TRAILER
	FS	FLAGSTAFF CAMPING TRAILER
	LF	QUALIFIER
	LU	LUMINA TOWABLES
	LW	LIMITED BASEMENT WIDE BODY CLASS C
	PR	PREMIER CAMPING TRAILER
	RC	REFRIGERATED CARGO
	RL	ROCKWOOD LITE WEIGHT TRAILERS
	RT	REAL-LITE
	UR	QUAILRIDGE PARK MODEL TRAILERS
	SA	SANDPIPER TOWABLES

SB	SNOWBIRD
SH	SANDPIPER HARDWALL TOWABLES
SE	SIERRA TOWABLES
SG	SIGNATURE CAMPING TRAILER
SH	SIERRA HARDWALL TOWABLES
SL	SANDPIPER LTD TOWABLES
SK	SNOW KING
SM	SALEM TOWABLES
SN	SENTINAL PARK MODEL TRAILER
SP	SPINNAKER TOWABLES
SU	SUMMIT PARK MODEL TRAILER
SR	SUNRISE TOWABLES
TB	TRAIL BLAZER
VL	VICTORY LANE
VT	VERI-LITE
WE	WEE GO
WD	WILDWOOD TOWABLES
WH	WILDWOOD HARDWALL TOWABLES

7 UNIT LENGTH ALL TOWABLES

A=25'	G=31'	N=37'	V=20'		
B=26'	H=32'	P=38'	W=21'		
C=27'	J=33'	R=39'	X=22'		
D=28'	K=34'	S=40'	Y=23'		
E=29'	L=35'	T=18'	Z=24'		
F=30'	M=36'	U=19'			
0=10'	1=11'	2=12'	3=13'		
4=14'	5=15'	6=16'	7=17'	8=44'	9=46'

8 AXLE CONFIGURATION
0= NO AXLES 1=1 AXLE, 2= 2 AXLES, 3= 3 AXLES, 4= 4 AXLES

9 IS A CALCULATED CHECK DIGIT

10 MODEL YEAR

11 ALPHA character NOTING PLANT LOCATION

A=3010 College Ave Goshen, In
B=2780 College Ave Goshen In
C= 255 S. Pepper Ave. Rialto, Ca
D=201 W. Elm Millersburg, In
E=2801 Oakland Elkhart, In
F=65275 Elder Dr Goshen, In.
G=58277 S.R. 19 Elkhart, In
H=52645 PARK 6 CT. Elkhart, In
J=2762 COLLEGE AVE Goshen, In
K=1402 LINCOLNWAY EAST Goshen, In
L=2211 W. WILDEN AVE. Goshen, In

2

M=2323 Middlebury St. Elkhart, In
N=29618 C.R. 12 Elkhart, In

12 TO 17 000100 UNIT NUMBERS

If there are any questions or comments please contact William Conway at (219)534-6913.

Sincerely,

William Conway
VP Engineering

WGC/rb
Cc Joe Greenlee
nhtsavin.doc

3

01-022-N11B-7024

Safety Center
NORTH AMERICAN OPERATIONS

October 26, 1998
USG 3409, Part II

FILE

Office of the Administrator
National Highway Traffic Safety Administration
400 Seventh Street, SW
Washington, DC 20590
Attention: Mr. George Entwistle, VIN Coordinator

10p.

Subject: Second Update of General Motors Vehicle Identification Number decoding for 1999 Model Year

Dear Mr. Entwistle:

Attached are updated pages of the General Motors Vehicle Identification Numbering (VIN) Standard for 1999 model year vehicles. This information is submitted per the VIN reporting requirements of 49 CFR Part 565.7.

The following revisions have been made:

Section B,
- Page 2, deleted carlines FG, FT and NL. Verbiage added.
- Page 4, verbiage changes
- Page 5, added vehicle WL
- Page 8, deleted J car, added ZM, N, P, R, and ZY
- Page 12, deleted engine code F. Verbiage changes.

Section C,
- Page 3, verbiage change and Escalade reference added
- Page 7, deleted engine codes N and S. Verbiage changes.
- Page 8, deleted engine code 5. Verbiage added.

Section D,
- Page 6, deleted engine codes L, M and P. Format and verbiage changes.

If you have any questions, please contact Thomas Braun of our Warren, Michigan office at (810) 947-1913.

Sincerely,

Peter A. Jerabek, Manager
Safety Affairs & Regulations

Attachments

Safety Affairs & Regulations
Mail Code 480-111-S56
30200 Mound Road
Warren, Michigan 48090-9010

B. Passenger Cars

TABLE B2a: Carline and Series Codes - CHEVROLET (VIN positions 4 and 5)

For vehicles with Make Identifier Codes: 1G1, 2C1, 2G1, 1Y1, 3G1, 4G3, 4G1

	CARLINE	SERIES		DESCRIPTION
	F	P		CAMARO SPORT COUPE & CONVERTIBLE
	J	C		CAVALIER
#	J	F		CAVALIER Z24, CAVALIER SEDAN, CAVALIER CONVERTIBLE
	J	G		TOYOTA (COUPE & SEDAN)
	J	H		TOYOTA (COUPE & SEDAN)
	M	R	(2C1)	METRO
#	N	D		MALIBU SEDAN
#	N	E		MALIBU LS SEDAN
	S	K	(1Y1)	PRIZM
	W	L		LUMINA
	W	N		LUMINA LTZ
	W	W		MONTE CARLO LS
	W	X		MONTE CARLO Z34
	Y	Y		CORVETTE

B. Passenger Cars

TABLE B2c: Carline and Series Codes - OLDSMOBILE (VIN positions 4 and 5)

For Vehicles With Make Identifier Codes: 1G3, 2G3

	CARLINE	SERIES	DESCRIPTION
	G	R	AURORA
#	H	C	EIGHTY-EIGHT 50TH ANNIVERSARY EDITION
	H	N	EIGHTY EIGHT
	H	Y	LSS
#	N	B	CUTLASS LEVEL I
#	N	G	CUTLASS LEVEL II
	N	F	ALERO GLS
	N	K	ALERO GX
	N	L	ALERO GL
#	W	H	INTRIGUE GX
	W	S	INTRIGUE GL
	W	X	INTRIGUE GLS

B. Passenger Cars

TABLE B2d: Carline and Series Codes - BUICK (VIN positions 4 and 5)

For Vehicles With Make Identifier Codes: 1G4, 2G4

	CARLINE	SERIES	DESCRIPTION
	C	U	PARK AVENUE - ULTRA
	C	W	PARK AVENUE
	G	D	RIVIERA
	H	P	LESABRE CUSTOM
	H	R	LESABRE LIMITED
	W	B	REGAL LS
	W	F	REGAL GS
#	W	L	SAIC1 (REGAL GL)
	W	S	CENTURY CUSTOM
	W	Y	CENTURY LIMITED

B. Passenger Cars

TABLE B2g: Carline and Series Codes - SATURN (VINS positions 4 and 5)

For Vehicles With Make Identifier Codes: 1G8

	CARLINE	SERIES	DESCRIPTION
#	Z	E	SC1 COUPE MANUAL
	Z	F	SC1 COUPE, SL SEDAN
#	Z	G	SC2 COUPE, SW1 WAGON, SL1 SEDAN MANUAL
	Z	H	SC2 COUPE, SW1 WAGON, SL1 SEDAN AUTO
	Z	J	SW2 WAGON, SL2 SEDAN MANUAL
	Z	K	SW2 WAGON, SL2 SEDAN AUTO
#	Z	M	SW1 WAGON RH DRIVE
#	Z	N	SC1 COUPE RAD
#	Z	P	SC1 COUPE RAD
#	Z	R	SC2 COUPE RAD
#	Z	Y	SC2 COUPE RAD

B. Passenger Cars

TABLE B4: Engine Codes (VIN position 8)

For Vehicles with Make Identifier Codes:

1G1	1G2	1G3	1G4	1G6		1Y1	1G8	
2G1	2G2	2G3	2G4					
2C1	2C2				2C7			
3G1	3G2							
4G1	4G2	4G3					4G5	4GL
				W06				

	CODE	ENGINE DEFINITION	DESIGN BY	RPO	NAME PLATE USAGE
	C	4.0L V8 MFI	WRN1	L47	Olds
	E	3.4L6 MFI	HO LAN	LA1	Chev, Pont, Olds
	G	5.71 V8 MFI	WRN	LS1	Chev, Pont
	H	3.5L V6 MFI	FLT	LX5	Olds
	J	3.1L V6 SFI		LG8	Chev Olds
	K	3.8L V6 MFI	FLT	L36	Chev, Pont, Olds, Buick
	M	3.1L V6 MFI	FLT	L82	Chev, Pont, Olds, Buick
	R	3.0L V6 MFI	OPEL	L81	Cad
	T	2.4L L4 MFI	LAN	LD9	Chev, Pont, Olds, Toyota
#	Y	4.6L V8 MFI	WRN1	LD8	Cad
	1	3.8L V6 MFI	FLT	L67	Pont, Olds, Buick
	2	1.3L L4 MFI	SUZUKI	LY8	Chev, GM Can
	4	2.2L L4 MFI	LAN	LN2	Chev, Pont
	5	102KW,AC,312V	GMEV	LN1	GMEV
	6	1.0L L3 TBI	SUZUKI	LP2	Chev
	7	1.9L L4 SFI	SAT	LL0	Sat
	8	1.9L L4 SFI	SAT	L24	Sat
	8	1.8L L4 MFI	TOYOTA	LV6	Chev
#	9	4.6L V8 MFI	WRN1	L37	Cad

GM POWERTRAIN LEGEND:

WRN1 = GMPTG WARREN (PREM V)
WRN = GMPTG WARREN (SM. BLK)
GMEV = GM ELECTRIC VEHICLE
LAN = GMPTG LANSING
FLT = GMPTG FLINT
SAT = SATURN

C. MPV's, Light Duty Trucks, Buses$ & Incomplete Vehicles

TABLE C3: Line and Chassis Types (VIN position 5)

For Vehicles with an Alpha Character in the 5th Position

For Vehicles with Make Identifier Codes:

1GA$	1GB	1GC	1GD	1GE	1GT	1GJ$	1GK	1GN	1GM	4GL	2CG	1GH	1S9
	2GB	2GC	2GD		2GT								
	3GB		3GD				3GK	3GN	3GM				
1GG		2CC			2CT		2CK	2CN					
			4GD										
1GY													

$ Specific to Chevrolet and GMC Vans which are classified as Buses when equipped with a seating which will exceed ten (10) passengers.

	CODE		LINE DESCRIPTION	CHASSIS TYPE DESCRIPTION
	B		Special Body from Buick or Chevrolet Passenger Car	4 X 2 Chassis Type
#	C	*	Conventional Cab	4 X 2 Chassis Type
	D		Military Truck	4 X 4 Chassis Type
	E		Compact Cab/Electric Truck (FWD)-Small Conventional Cab	4 X 2 Chassis Type
	G	**	Van	4 X 2 Chassis Type
	H		Chassis Cutaway or commercial chassis/vehicle from Cad Pass Car	4 X 2 Chassis Type
	J		Compact Cab	4 X 4 Chassis Type
#	K	*	Conventional Cab	4 X 4 Chassis Type
	L	***	Small Van	4 X 4 Chassis Type
	M	***	Small Van	4 X 2 Chassis Type
	P		Forward Control	4 X 2 Chassis Type
	S	*	Small Conventional Cab	4 X 2 Chassis Type
	T	*	Small Conventional Cab	4 X 4 Chassis Type
	U		All Purpose Vehicle	4 X 2 Chassis Type
	X		All Purpose Vehicle (EXT)	4 X 2 Chassis Type

* Includes C/K Suburbans, and both C/K and S/T Chevrolet Blazers, Oldsmobile
# Bravadas, GMC Jimmys and Cadillac Escalade.

** Includes Chevrolet Vans, Express Van, Commercial Cutaway, RV Cutaway and GMC Savana Cargo, Savana Passenger, GMC Savana Special and Savana Camper Special.

*** - Includes Astro and Safari Vans.

C. MPV's, Light Duty Trucks, Buses$ & Incomplete Vehicles

TABLE C6b: Engine Codes (VIN position 8)

For Vehicles with an Alpha Character in the 5th Position, Except B and H (for which see Table C6a).

For Vehicles with Make Identifier Codes:

	1GA$	1GB	1GC	1GD	1GT	1GJ$	1GK	1GN	1GM	2CG	1GH	1S9
		2GB	2GC	2GD	2GT							
	1GG		2CC		2CT		2CK	2CN	3GM			
				4GD								
		3GB		3GD			3GK	3GN				
#	1GY											

$ Specific to Chevrolet and GMC Vans which are classified as Buses when equipped with seating which will exceed ten (10) passengers.

	CODE		DESIGN BY	ENGINE DESCRIPTION	RPO
#	A	@	LAN	2.2L L4 MFI, DOHC	LA9
	B		WRN	7.4L V8, MFI Performance	L21
	C		SUZUKI	2.0L L4, MFI, DOHC	L34
#	E		FLT	3.4L V6 MFI	LA1
	F		ROM	6.5L V8 Diesel, Turbo, HO	L65
	H		GMEV(Delco)	85KW,AC,312V	LN1
#	J		WRN	7.4L V8 MFI HO	L29
	K		WRN	5.7L V8 TBI	LØ5 (Mex. Only)
	L		MEX	4.1L, L6, MFI	LH3
#	M		WRN	5.0 V8 CPI	L3Ø
#	R		WRN	5.7L V8 CPI	L31
#	T			5.3L V8, MFI, Iron	LM7
#	U			6.0L V8, MFI, Iron	LQ4
#	V			4.8L V8, MFI, Iron	LR4
	W		WRN	4.3L V6 CPI, 90 deg.	L35
#	X		WRN	4.3L V6 CPI 90 degree	LF6
#	Y		ROM	6.5L V8 Diesel, HO	L57

C. MPV's, Light Duty Trucks, Buses$ & Incomplete Vehicles (Cont'd)

TABLE C6b: Engine Codes (VIN position 8) (Cont'd)

	CODE		DESIGN BY	ENGINE DESCRIPTION	RPO
#	4	**	LAN	2.2L L4 MFI	LN2
	6		SUZUKI	1.6L L4 MFI, OHC	LØ1
	7		MEX	4.1L L6, GAS, TBI	LH9 (Mex. Only)
	8	@	LAD	3.0L V6 MFI, DOHC, HO	LL6
#	9	@	LAD	2.2L L4 MFI Turbo Diesel DOHC	LL9 (Opel)

* LPG conversion can be accomplished on the engine.
& Electric Motor installed by Body Builder.
@@ Natural Gas Conversion can be accomplished on the engine.
** Note: Engine also released for passenger car - see Table B4.
@ For Export Only (APV)

GM Powertrain Legend: WRN - WARREN, WRN/B - WARREN/BRAZIL, FLT - FLINT
LAN - LANSING, DET - DETROIT, ROM - ROMULUS
MEX - MEXICO, GMEV - ELECTRIC VEHICLE

D. Medium Duty Trucks & Incomplete Vehicles

TABLE D6: Engine Codes (VIN position 8)

For Vehicles with a numeric in the 5th Position

For Vehicles with Make Identifier Codes:

1GC 1GT 1GB 1GD J8B J8D
2GC 2GT 2GB 2GD 4GT

#	CODE	CYL	L	ENGINE DESCRIPTION	RPO
	B	8	7.4	GM V8, MFI, High Performance	L21
#	C	6	7.2	CAT L6 Turbo, Electronic	LG5
	D	8	7.4	GM V8, MFI	LP4
	F	8	6.5	GM V8 Turbo Diesel, HO	L65
	J	6	6.6	CAT 3116 Diesel	LXØ
#	K	L4	3.9L	4BD2-TC, Turbo DSL	**
	R	8	5.7	GM CPI	L31
	X			Designation for Glider Kits - No Engine involved.	
	2	6	7.1	Isuzu 6HE1TC Diesel	LN4*
#	3	6	7.8	Isuzu DI Turbo Diesel	LG4
	4	L4	4.8L	4HE1-TC-S, I/C Turbo Diesel	**
	5	L4		4HE1-TC-N	**

* NOTE: Total liability for Warranty & Servicing is Isuzu responsibility.

** = None GM codes K, 4 & 5 are for ISUZU engine used by ISUZU ordered vehicles built by GM.

01-022-NHB-7025

HART DESIGNS
P.O. 143
4265 Jefferson Street
Excelsior, Mn. 55331

October 26, 1998

FILE

Administrator
National Highway Traffic Safety Administation
400 Seventh Street, SW
Washington, DC 20590
Attn: VIN Coordinator

Subject: VIN Decoding Information for Hart Designs

In accordance with 565.7 (c) of 49 CFR Part 565, *Vehicle Identification Number*, Hart Designs hereby submits Vehicle Identification Number (VIN) decoding information.

VIN POSITION:	DESCRIPTION:	CODES:
1,2,3	WMI	1H9
4	Trailer Type	C=Canoe trailer K=Kayak trailer
5	Body type	A=Adjustable R=rigid
6,7	Length of trailer	20=20 feet 16=16 feet
8	Number of axles	1=1 axle
9	Check digit	Calculate-49 CFR 565.4
10	Model year	X=1999 Y=2000
11	Plant location	E=Excelsior
12,13,14	WMI	3,3,2
15,16,17	Sequential production #	001 002

01-022-N11B-7026

HONDA

AMERICAN HONDA MOTOR CO., INC.
1919 Torrance Boulevard • Torrance, CA 90501-2746
(310) 783-2000

October 19, 1998

AHCERT-983578

Administrator
National Highway Traffic Safety Administration
400 Seventh Street, S.W.
Washington, D.C. 20590

FILE

ATTENTION: V.I.N. Coordinator

Dear Administrator:

In accordance with 49 CFR, Part 565.5, Vehicle Identification Number-Content Requirements, Section 565.5(b), we are enclosing information specified in the regulation that is applicable for the following 1999 model year automobile(s).

HONDA: CR-V

Yours truly,

AMERICAN HONDA MOTOR CO., INC.

William R. Willen
Managing Counsel
Product Legal Group

WRW/llw

Enclosure(s)

EXECUTIVE SECRETARIAT
1998 NOV -2 PM 12: 07
NATIONAL HIGHWAY
TRAFFIC SAFETY ADMIN.

laura S:\CERTIF\LAURA\DOC\VIN\NHTSA.DOC

INFORMATION ON CFR PART 565 - VEHICLE IDENTIFICATION NUMBER

- 1999 HONDA MULTIPURPOSE PASSENGER VEHICLE -

Issued : Oct. 13 '98

1. VEHICLE DETAIL AND THE VIN

Type : Multipurpose Passenger Vehicle Make : HONDA Model year : 1999

No.	Model	Transmission *2	GVWR Class	VIN (Example)
1	HONDA CR-V LX	5M/T	C	JHLRD174*XC000001
2	HONDA CR-V LX	4A/T	C	JHLRD184*XC000001
3	HONDA CR-V LX *1	5M/T	C	JHLRD175*XC000001
4	HONDA CR-V LX *1	4A/T	C	JHLRD185*XC000001
5	HONDA CR-V EX	5M/T	C	JHLRD176*XC000001
6	HONDA CR-V EX	4A/T	C	JHLRD186*XC000001
7	HONDA CR-V LX *3	4A/T	C	JHLRD284*XC000001
8	HONDA CR-V LX *1 *3	4A/T	C	JHLRD285*XC000001

Note * Check digit input

*1 : ABS (Anti-lock Brakes)

*2 : 5M/T : 5 Speed Manual

4A/T : 4Speed Automatic

*3 : 2 Wheel Drive

2

Issued : Oct. 13 '98

3. DESCRIPTION OF 2ND SECTION

No.	2nd sec.	Line and Series	Body Type	Gross vehicle weight rating	*2 Trans-mission	Engine Type (horse power)
1	RD174	HONDA CR-V LX	5DOOR	Class C	5M/T	B20Z2 (146HP)
2	RD184	HONDA CR-V LX	5DOOR	Class C	4A/T	B20Z2 (146HP)
3	RD175	HONDA CR-V LX *1	5DOOR	Class C	5M/T	B20Z2 (146HP)
4	RD185	HONDA CR-V LX *1	5DOOR	Class C	4A/T	B20Z2 (146HP)
5	RD176	HONDA CR-V EX	5DOOR	Class C	5M/T	B20Z2 (146HP)
6	RD186	HONDA CR-V EX	5DOOR	Class C	4A/T	B20Z2 (146HP)
7	RD284	HONDA CR-V LX *3	5DOOR	Class C	4A/T	B20Z2 (146HP)
8	RD285	HONDA CR-V LX *1 *3	5DOOR	Class C	4A/T	B20Z2 (146HP)

*1 ABS (Anti-lock Brakes)

*2 5M/T : 5 Speed Manual

4A/T : 4 Speed Automatic

*3 : 2 Wheel Drive

01-022-N11 B-7027

LOBB TRAILER MANUFACTURING
1331½ S. "E" Street
San Bernardino, Ca. 92403
Phone: 909-384-1333 Fax: 909-384-1922

October 17,1998

FILE

2p.

RE: Construction of my Vehicle Identification Number.

Dear Mr. Oris Younger,

My Name is Mike Lobb. I am in business to produce trailers for the dirt, sand and gravel industries. The name of the business is LOBB TRAILER MANUFACTURING. LLC.

In my application with the California Department of Motor Vehicles i found by way of Cathy Douds of the SOCIETY OF AUTOMOTIVE ENGINEERS that I should construct, for your approval, a 17 character vehicle identification number. The following is my description and proposal pending your OK.

Coding:	Type Trailers:	Coding:	Body Type:	Coding: # of axles
B =	Bottom dumps	S=	Semi Trailer	Number = actual Number of Axles
T=	Transfer Trailer	P=	Pull Trailer	on the unit
E=	End Dump			

Coding:	Plant Location:
S=	San Bernardino California

Example of My proposal for a 17 digit Identification number and check digit calc's for a Double Bottom Dump Semi:

WMI 1-3(always1L9) 12-14 (always 248)

1	2	3	4	5	6	7	8	9	10	11	12	13	14	15	16	17	
1	L	9	B	S	2	0	1	3	W	S	2	4	8	0	0	1	Actual VIN #

WMI From SAE
Type of Trailer
Body Type
Length
Number of Axles
Check Digit
Model Year
Plant Location
Mfg. Identifier
(From SAE<500 Units/year)
Production sequence

Check digit calculations

Converted Values from Table A (Alpha Characters Converted To Numerical)

1	2	3	4	5	6	7	8	9	10	11	12	13	14	15	16	17	
1	L	9	B	S	2	0	1	3	W	S	2	4	8	0	0	1	Actual VIN #
1	3	9	2	2	2	0	1	0	6	2	2	4	8	0	0	1	Converted
8	7	6	5	4	3	2	10	0	9	8	7	6	5	4	3	2	Multiplier
8	21	54	10	8	6	0	10	0	54	16	14	24	40	0	0	2	Product

SUM=267

267 Divided by 11 = 24.27 = 24 Whole Number and .27 is the fraction

The Decimal is .27 so the Check digit is 3 From Table B (Entered In Position 9)

1

LOBB TRAILER MANUFACTURING
1331½ S. "E" Street
San Bernardino, Ca. 92403
Phone: 909-384-1333 Fax: 909-384-1922

October 17, 1998

Example of My proposal for a 17 digit Identification number for a Double Bottom Dump PULL:

1	2	3	4	5	6	7	8	9	10	11	12	13	14	15	16	17
1	L	9	B	P	2	0	2	2	W	S	2	4	8	0	0	2

WMI From SAE
Type of Trailer
Body Type
Length
Number of Axles
Check Digit
Model Year
Plant Location
Mfg. Identifier
(From SAE<500 Units/year)
Production sequence

Check digit calculations

Converted Values from Table A (Alpha Characters Converted To Numerical)

1	2	3	4	5	6	7	8	9	10	11	12	13	14	15	16	17	
1	L	9	B	P	2	0	2	2	W	S	2	4	8	0	0	2	Actual VIN #
1	3	9	2	7	2	0	2	0	6	2	2	4	8	0	0	2	Convertea
8	7	6	5	4	3	2	10	0	9	8	7	6	5	4	3	2	Multiplier
8	21	54	10	28	6	0	20	0	54	16	14	24	40	0	0	4	Product

SUM=299

299 Divided by 11 = 27.1818 = 27 Whole Number and .18 is the fraction

The Decimal is .18 so the Check digit is 2 From Table B (Entered Position 9)

Thank You for your time,
Sincerely,

Mike Lobb

01-022-NHB-7028

MACK TRUCKS, INC.
Engineering Development & Test Center
Phone: 610.709.3011
Fax: 610.709.8150

2402 Lehigh Parkway South
P.O. Box 1907
Allentown, PA 18105-1907

November 4, 1998

Administrator, National Highway
Traffic Safety Administration
400 Seventh Street, S.W.
Washington, D.C. 20590

FILE

8P.

Attention: VIN Coordinator

Dear Madam:

SUBJECT: VEHICLE IDENTIFICATION NUMBER (VIN) CODING INFORMATION - REVISION E-98

Pursuant to Sections 565.7 (c) and (d) of 49 CFR Part 565, Vehicle Identification Number Requirements, Mack Trucks, Inc., a manufacturer of heavy duty trucks of 12700 kilograms (28,000 pounds) GVWR and greater, submits the attached revision to the VIN coding information for such vehicles manufactured by Mack Trucks, Inc. The following page(s) has been revised to reflect an addition to our VIN coding information.

Revised Page	Revision Category
Index page 1	Reformatted & revised to reflect the addition of page P-14.
Index page 2	Reformatted.
XA-1	Reformatted & revised to include reserved codes.
XB-1	Reformatted.
P-14	Added page and codes P336, P337 & P338.
YA-1	Reformatted & revised GVWR descriptions.
YB-1	Reformatted & revised (eliminated character ten data).

Very truly yours,

MACK TRUCKS, INC.

Thomas F. Brown
Executive Staff Engineer
Vehicle Development Laboratory

Attach.

INDEX TO VIN CODING INFORMATION FOR MACK VEHICLES MANUFACTURED BY MACK TRUCKS, INC., MACK CANADA INC. & RENAULT V.I.

	PAGE
FIRST SECTION (VIN characters one, two and three) (Manufacturer, Make and Vehicle Type) ———	XA-1
SECOND SECTION (VIN characters four, five, six and seven) (model, series, cab type and engine type)	
General Notes	XB-2
Codes beginning with:	
A	A-1 through 7
B	B-1 through 7
C	C-1
D	D-1
E	E-1 through 7
F	F-1 through 5
G	G-1
H	H-1 through 7
J	J-1 through 3
K	K-1 through 6
L	L-1 through 3
M	M-1
N	N-1 through 14
P	P-1 through 14
R	R-1 through 3
S	S-1 through 10
T	T-1 through 5
U	U-1 through 9
V	V-1 through 9
W	W-1 through 4
X	X-1 through 9
Y	Y-1 through 9
AA	AA-1
AC	AC-1
AD	AD-1 through 4
AE	AE-1
AG	AG-1
AM	AM-1 through 3
AR	AR-1 through 4
AS	AS-1 through 2
AY	AY-1 through 5
BA	BA-1
BB	BB-1
BC	BC-1

Revised 07/06/92, 07/24/92, 09/03/92, Reformatted 05/31/96, Revised 07/01/96, 08/15/96, Reformatted & revised 09/26/96, Revised 12/19/96, 02/20/98, Reformatted & revised 11/04/98

2

INDEX TO VIN CODING INFORMATION FOR MACK VEHICLES MANUFACTURED BY MACK TRUCKS, INC., MACK CANADA INC. & RENAULT V.I.

	PAGE
SECOND SECTION (Continued) (VIN character eight) (GVWR class, chassis type and brake system)	YA-1
FOURTH SECTION (VIN character eleven) (plant of manufacture)	YB-1

Revised 07/06/92, Reformatted 05/31/96, Revised 09/26/96, Reformatted & revised 11/04/98

3

VIN CODING INFORMATION FOR MACK VEHICLES MANUFACTURED BY MACK TRUCKS, INC., MACK CANADA INC. & RENAULT V.I.

FIRST SECTION (VIN characters one, two and three)

"1M1" -	Manufacturer:	Mack Trucks, Inc.
	Make:	Mack
	Vehicle Type:	Truck (Completed Vehicle)
"1M2" -	Manufacturer:	Mack Trucks, Inc.
	Make:	Mack
	Vehicle Type:	Incomplete Vehicle
"1M3" -	Manufacturer:	Mack Trucks, Inc.
	Make:	Mack
	Vehicle Type:	Glider Kit
"1M4" -	Manufacturer:	Mack Trucks, Inc.
	Make:	Reserved for future use
	Vehicle Type:	Reserved for future use
"2M1" -	Manufacturer:	Mack Canada Inc.
	Make:	Mack
	Vehicle Type:	Truck (Completed Vehicle)
"2M2" -	Manufacturer:	Mack Canada Inc.
	Make:	Mack
	Vehicle Type:	Incomplete Vehicle
"2M3" -	Manufacturer:	Mack Canada Inc.
	Make:	Mack
	Vehicle Type:	Glider Kit
"2M4" -	Manufacturer:	Mack Canada Inc.
	Make:	Reserved for future use
	Vehicle Type:	Reserved for future use
"VG6" -	Manufacturer:	RENAULT V.I.
	Make:	Mack
	Vehicle Type:	Incomplete Vehicle
"VG7" -	Manufacturer:	RENAULT V.I.
	Make:	Reserved for future use
	Vehicle Type:	Reserved for future use
"VG8" -	Manufacturer:	RENAULT V.I.
	Make:	Mack
	Vehicle Type:	Bus (Completed Vehicle)

Revised 11/11/87, 03/09/93, Reformatted 05/31/96, Reformatted & revised 11/04/98

4

SECOND SECTION (VIN characters four, five, six and seven)

NOTES:

(1) Cab type abbreviations:

CAE: cab-ahead-of-engine
CBE: cab-behind-engine (conventional)
COE: cab-over-engine
LCF: low-cab-forward

(2) All engines are diesel fueled, except where noted otherwise (e.g., "LNG" for liquefied natural gas), and all horsepowers are SAE J816b corrected (29.00 in. Hg (736.6 mm Hg) and 85F (29.4C) dry air) except for those horsepowers followed by an asterisk (*) which are corrected to 29.92 in. Hg (760.0 mm Hg) and 60F (15.6C) dry air.

(3) The engine type indicated reflects the vehicle at the time it left the plant of manufacture, and does not necessarily represent the engine type in the vehicle at a later date.

(4) Engine type abbreviations:

BHP: brake horsepower
CID: cubic inch displacement
CYL: cylinders
kW: kilowatts
L: liters
LNG: liquefied natural gas

Revised 03/09/93, Reformatted 05/31/96, Revised 07/24/97, Reformatted 11/04/98

5

VIN CODING INFORMATION
FOR MACK VEHICLES

CODES P336 THROUGH P338

CODE	MODEL	SERIES	CAB TYPE	ENGINE TYPE	MACK VEHICLE DESIGNATION
P336	RD	600	CBE	6 Cyl.- 728 CID (12.0 L) 355 BHP (265 kW)	RD690P
P337	RD	600	CBE	6 Cyl.- 728 CID (12.0 L) 355 BHP (265 kW)	RD690S
P338	RD	600	CBE	6 Cyl.- 728 CID (12.0 L) 355 BHP (265 kW)	RD690SX

Issued 11/04/98.

SECOND SECTION (VIN character eight)

"A" -	GVWR Class;	6	(greater than 8845 kg to 11793 kg or 19,501 - 26,000 lbs.)
	Chassis Type;	Truck	
	Brake System	Air	
"B" -	GVWR Class;	7	(greater than 11793 kg to 14968 kg or 26,001 - 33,000 lbs.)
	Chassis Type;	Truck	
	Brake System	Air	
"C" -	GVWR Class;	8	(greater than 14968 kg or 33,001 lbs. and over)
	Chassis Type;	Truck	
	Brake System	Air	
"D" -	GVWR Class;	8	(greater than 14968 kg or 33,001 lbs. and over)
	Chassis Type;	Bus	
	Brake System	Air	
"K" -	GVWR Class;	Unknown	
	Chassis Type;	Glider Kit	
	Brake System	Air	
"W" -	GVWR Class;	6	(greater than 8845 kg to 11793 kg or 19,501 - 26,000 lbs.)
	Chassis Type;	Truck Tractor	
	Brake System	Air	
"X" -	GVWR Class;	7	(greater than 11793 kg to 14968 kg or 26,001 - 33,000 lbs.)
	Chassis Type;	Truck Tractor	
	Brake System	Air	
"Y" -	GVWR Class;	8	(greater than 14968 kg or 33,001 lbs. and over)
	Chassis Type;	Truck Tractor	
	Brake System	Air	

NOTE: The GVWR class and chassis type indicated reflect the vehicle as it left the plant of manufacture, and do not necessarily represent the vehicle at a later date.

Revised 08/26/81, 05/16/85, Reformatted & revised 11/04/98

7

FOURTH SECTION (VIN character eleven - plant of manufacture)

"A" -	Allentown, PA, U.S.A
"B" -	Blainville, France
"C" -	Oakville, Ontario, Canada
"F" -	Annonay, France
"H" -	Hayward, CA, U.S.A.
"M" -	Macungie, PA, U.S.A.
"P" -	Philadelphia, PA, U.S.A.
"S" -	Sacramento, CA, U.S.A.
"T" -	Stockertown, PA, U.S.A.
"W" -	Winnsboro, SC, U.S.A.

Revised 05/15/81, 05/16/85, 05/11/87, Reformatted & revised 11/04/98

8

01-022-N11 B-7029

MACK TRUCKS, INC.
Engineering Development & Test Center
Phone: 610.709.3011
Fax: 610.709.8150

2402 Lehigh Parkway South
P.O. Box 1907
Allentown, PA 18105-1907

November 9, 1998

Administrator, National Highway
Traffic Safety Administration
400 Seventh Street, S.W.
Washington, D.C. 20590

FILE 2p.

Attention: VIN Coordinator

Dear Madam:

SUBJECT: VEHICLE IDENTIFICATION NUMBER (VIN) CODING INFORMATION - REVISION F-98

Pursuant to Sections 565.7 (c) and (d) of 49 CFR Part 565, Vehicle Identification Number Requirements, Mack Trucks, Inc., a manufacturer of heavy duty trucks of 12700 kilograms (28,000 pounds) GVWR and greater, submits the attached revision to the VIN coding information for such vehicles manufactured by Mack Trucks, Inc. The following page(s) has been revised to reflect an addition to our VIN coding information.

Revised Page	Revision Category
AM-3	Added codes AM36 & AM37.

Very truly yours,

MACK TRUCKS, INC.

Thomas F. Brown
Executive Staff Engineer
Vehicle Development Laboratory

Attach.

VIN CODING INFORMATION
FOR MACK VEHICLES

Codes AM35 through AM37

CODE	MODEL	SERIES	CAB TYPE	ENGINE TYPE	MACK VEHICLE DESIGNATION
AM35	RB	600	CBE	6 Cyl. - 728 CID (12.0 L) 400 BHP (298 kW)	RB688SX
AM36	RB	600	CBE	6 Cyl. - 728 CID (12.0 L) 427 BHP (318 kW)	RB688S
AM37	RB	600	CBE	6 Cyl. - 728 CID (12.0 L) 427 BHP (318 kW)	RB688SX

Issued 01/19/90, Reformatted & revised 11/09/98

01-022-NII-B-7030

MAGNUM PRODUCTS, INC.

918 Knopf Road · Berlin, WI 54923-2230 · (920) 361-4442 · Fax (920) 361-4416

October 19, 1998

1P.

FILE

Administrator
National Highway Traffic Safety Administration
Attn: VIN Coordinator, NSA-32
400 7th Street SW
Washington, DC 20590

Dear Sir or Madam:

The purpose of this letter is to advise you that Magnum Products, Inc. will be using the VIN listed below for a new product line of liquid cooled generators. We will have three different sizes of trailers and the 7th digit will reflect these lengths (11, 13 or 16 feet).

5 - Assigned by SAE
A - Assigned by SAE
J - Assigned by SAE
G - Type of Trailer (Generator) - G
S - Series/Body Type (Standard) - S
1 - Length (10 feet)
- Length (1, 3, or 6 feet)
1 - Number of Axles (1)
X - Check Digit
W - Model Year (1998)
B - Manufacturing Plant (Berlin, WI)
0 - Assigned by SAE
0 - Assigned by SAE
0 - Assigned by SAE
0 - Sequential Serial Number
0 - Sequential Serial Number
1 - Sequential Serial Number

Please add this to our file that contains the VIN for our light towers.

If you have any questions, please feel free to call. Thank you.

Sincerely,

Kirstin Liptow

Kirstin Liptow
Customer Service Manager

01-022-NHB-7031

Mazda Motor Corporation
P.O.Box18, Hiroshima
730-91 Japan
Telephone:(082)282-1111
Telex:652333 MAZDA J

mazda

Administrator
National Highway Traffic Safety
Administration
400 Seventh Street, S. W.
Washington, D. C. 20590
USA

Attention: VIN Coordinator

2p.

October 26, 1998
Our Ref. No. NH98/13

Subject: 1999 VIN Coding - Revision

Reference: Our letter no. NH98/06 dated May 6, 1998

FILE

Dear Sir:

We are submitting amended VIN code information for 1999 Mazda B-series which reflects the following revisions.

1. Engine code for 3.0-litter engine is revised.
2. Note for 3.0-litter engine is added.

If you have any questions, please do not hesitate to let us know.

Sincerely,

Kazuhiko Takahashi
Manager
Overseas Certification Group
Environmental & Safety
Engineering Department

Encl.

cc: Mazda Canada Inc.
Mazda North American Operations - Ann Arbor Office
Mazda North American Operations - Irvine Office

EXECUTIVE SECRETARIAT
1998 NOV -2 AM 11:58
NATIONAL HIGHWAY
TRAFFIC SAFETY ADMIN.

1999 MY B-Series VIN Coding

VIN Position: 123 | 4 | 567 | 8 | 9 | 10 | 11 | 11-17

Manufacturer & Vehicle Type (pos. 1 - 3)
- 4F4 = MAZDA MAKE Truck manufactured by FORD

Brake System/GVWR Class (pos. 4)
- T = Hydraulic/Class A/with Second Generation Airbags
- U = Hydraulic/Class B/with Second Generation Airbags
- Y = Hydraulic/Class C/with Second Generation Airbags
- Z = Hydraulic/Class D/with Second Generation Airbags

Carline/Model (pos. 5 - 7)
- R12 = B-Series P/U Regular Cab 4x2
- R13 = B-Series P/U Regular Cab 4x4
- R16 = B-Series P/U Super Cab 4x2
- R17 = B-Series P/U Super Cab 4x4

Engine Type (pos. 8)
- C = 2.5 EFI-SOHC I-4
- revised/ V = 3.0 EFI-FFV V6 (*1)
- X = 4.0 EFI V6

Check Digit (pos. 9)

Model Year (pos. 10)
- X = 1999

Plant of Manufacture (pos. 11)
- T = Edison, New Jersey

Serial Number (pos. 12 - 17)
- M00001 to M99999

(*1) FFV: Flexible Fuel Vehicle

01-022-N11B-7032

MOUNTIAN RIDGE TRAILERS
126 Kilby Street
Sevierville, Tn. 37862-5538
423-428-1755
423-428-1923 Fax

FILE

1st	1	W M I CODE
2nd	M	
3rd	9	
4th	C-cattle / F-flatbed / U-utility / R-race car	> Trailer Type
5th	S-standard / P-special	> Trailer Series
6th		Length in feet
7th		
8th	No. of axles	
9th		Check Digit
10th	X- Year Model	
11th	S- Sevierville	Plant location
12th	4	W M I Code
13th	8	
14th	3	
15th	0	Production Sequence
16th	0	
17th	1	

2p.

* **Convert all letters to numbers
multiply from check digit list
add all #'s then divide by 11
convert digits after decimal into correct #.***

SAE The Engineering Society For Advancing Mobility Land Sea Air and Space ®
INTERNATIONAL

400 COMMONWEALTH DRIVE, WARRENDALE, PA 15096-0001 U.S.A.
Phone. (724) 772-8511 Fax No. (724) 776-0243

E-Mail: douds@sae.org
Web: http://www.sae.org

ISO Registration authority for ISO 3780

The Society of Automotive Engineers has been appointed by ISO to act as registration authority for the implementation of International Standard ISO 3780.

November 4, 1998

JOHN MCKINNEY
MOUNTAIN RIDGE TRAILERS
126 KILBY STREET
SEVIERVILLE, TN 37862

Dear JOHN MCKINNEY:

This letter confirms the assignment of a World Manufacturer (Maker) Identifier (WMI) Code. As the agent of the NHTSA for the assignment of manufacturer identifiers pursuant to CFR 49 Part 565 Vehicle Identification Number Requirements (VIN), we are confirming the following code:

MOUNTAIN RIDGE TRAILERS
126 KILBY STREET
SEVIERVILLE, TN 37862
UNITED STATES

1 M 9 with the 12th, 13th, and 14th characters of the WMI Code to be 4 8 3

TRAILERS

Should your company name and/or the ownership of your company change, or your address or your phone number change, please be sure to notify us as soon as possible.

If you have any questions concerning the construction of this WMI Code, you may call the National Highway Traffic Safety Administration at 202/366-6018 or fax 202/366-3081.

Sincerely,

Cathy Douds
WMI Coordinator

Enclosure

cc: VIN Coordinator

Nova BUS
INCORPORATED
QUALITY TECHNOLOGY
Transit Bus Division

01-022-N11B-7033

October 21, 1998

FILE

VIN Coordinator
National Highway Traffic Safety Administration
Department of Transportation
NEF-01, Room 5321
400 Seventh Street, SW
Washington, DC 20590

Dear VIN Coordinator:

Nova BUS INCORPORATED requires the following changes to our VIN designator:

Add new line 9, digit position 4 letter 'X' designates an experimental bus that is under development.

I have included an updated listing of the Nova BUS INCORPORATED designations for your reference.

Very truly yours,

Nova BUS INCORPORATED

Jim McDowell
Director of Advanced Engineering

cc: Jonathan De Jesus
Neal DeFranco
David West

JMcD/jww

P.O. Box 5670 (R.I.A.C.)
Roswell
New Mexico 88202-5670

Tel. : (505) 347-2011
Fax : (505) 347-7504

Nova BUS INCORPORATED Vehicle Identification Number (VIN)

MASTER LIST

Revised 10/21/98

Line	Digit Position	Designation	Description
1	1,2,3	4RK	Manufacturer's Identifier (Nova BUS Incorporated)
2	4	L	Model T806
3		M	Model T802
4		N	Model T706
5		P	Model T702
6		A	Model T602
7		B	Model T606
8		C	Model T8.502
9		X	Experimental Vehicle Under Development
10	5	W	RTS Wide Front Door
11		N	RTS Narrow Front Door
12		L	RTS Low Floor/WFD
13		X	RTS Low Floor/NFD
14	6	T	Transit Bus "V" Drive
15		H	Hybrid Transit Bus
16		E	Transit Bus "T" Drive
17	7	J	Series 50G, 518 Cubic Inches, Natural Gas Engine, 4 Cylinder, Brake HP 275
18		H	Cummins M11, 661 Cubic Inches, Diesel Engine, 6 Cylinder, Brake HP 280
19		G	Detroit Diesel Series 50, 518 Cubic Inches, Diesel Engine, 4 Cylinder, Brake HP 275
20		F	Cummins C 8.3-275, 504 Cubic Inches, Diesel Engine, 6 Cylinder, Brake HP 275
21		E	Cummins L10-280G, 610 Cubic Inches, Natural Gas Engine, 6 Cylinder, Brake HP 280
22		K	Cummins C8.3G 250 Natural Gas Engine, 6 Cylinder, Brake HP 250
23		L	Detroit Diesel Series 50, 518 Cubic Inches, Diesel Engine, 4 Cylinder, Brake HP 250
24		M	Cummins B Series 5.9 Liter, Diesel Engine, 6 Cylinder, Brake HP 230
25		N	Cummins C8.3 - 250, 8.3 liters, Diesel Engine, 6 Cylinder, Brake HP 250
26		X	Auxiliary power unit for hybrid propulsion system
27	8	A	Air Brake
28	9	0-9 or X Check Digit	
29	10	W	Current Model Year (1998)
30	11	R	Plant or Manufacturer (Roswell)
31	12-17	*	First Unit Number (Nova BUS Incorporated)

*First Unit Number (Nova BUS INCORPORATED) 830405

01-022-N11B-703 USA

SOLECTRIA

EXECUTIVE SECRETARIAT

1998 NOV 10 AM 10: 35

NATIONAL HIGHWAY TRAFFIC SAFETY ADMIN.

November 3, 1998

FILE

2p.

Administrator
National Highway Traffic Safety Administration
400 Seventh Street, SW
Washington, DC 20590

RE: Notification of VIN Code for Solectria Force

Dear Sir/Madam:

This letter serves as notification of a the VIN code for Solectria passenger vehicles. Solectria recently was assigned 5 B P as the WMI for the Solectria Force and Sunrise passenger vehicles. As of yet, no vehicles have been built or labeled with this WMI Code.

Solectria has changed the code for three other positions in the VIN for passenger cars, in order to align our VIN with other VIN's used by one of our suppliers. Enclosed is a table showing the revised VIN code scheme for your records.

If there are any questions regarding this information, please feel free to contact me.

Sincerely,

Kenneth Sghia-Hughes
Research Engineer

cc: James Worden
Eric Costa

Enclosure

SOLECTRIA CORPORATION
33 INDUSTRIAL WAY
WILMINGTON, MA 01887-3433
USA

978-658-2231
FAX 978-658-3224
http://www.solectria.com

Recycled Paper

1

Solectria VIN Key

11/3/98

Passenger Cars

5	B	P	F	E	5	2	L	2	X	W	0	0	0	0	0	1
World Manuf. Identifier			Line S = Sunrise F = Force	Series E = Base Package G = GT Package X = XE Package	Body Type 1 = 2-dr sedan 2 = 3-dr hatchback 3 = Reserved 4 = 5-dr wagon 5 = 4-dr sedan	Restraint Type 0 = Belts only 1 = Driver SRS 2 = Dual Airbags	Drive System Type L = ZEV Electric	Check Digit Calculated by formula	Year W = 1998 X = 1999 Y = 2000 1 = 2001 2 = 2002 3 = 2003 4 = 2004 5 = 2005 6 = 2006 7 = 2007 8 = 2008 9 = 2009	Manufacturing Plant B = Boston, MA W = Wilmington, MA	Serial Number					

01-022-NIIB-7035

SPARTAN

S P A R T A N
Compliance Engineering Group

To: David Coleman
National Highway Traffic Safety Administration
400 Seventh Street S.W.
Washington DC 20590

Wednesday, October 28, 1998

FILE

Fm: Kelli A. Oberlin

Re: Vehicle Identification Number Sheet Update

3p.

Dear David,

Please note the added lines M and N to print number 1997-ZZ1 referencing vehicle identification number. M line adds model line 4 for Summit chassis. N line adds model lines S = TR1, T=CFR 4X4 and U=CFR 6X6. If you have any questions or concerns please contact me at (517) 543 – 6400 Ext. 358.

Sincerely,

Kelli A. Oberlin

Kelli A. Oberlin
Compliance Group
Spartan Motors, Inc.

Document4
KAO/kao

SPARTAN MOTORS, INC. · P.O. BOX 440 · 1000 REYNOLDS RD · CHARLOTTE, MI 48813 · USA
[517] 543-6400 · FAX [517] 543-7729

Spartan Motors VIN Syste

4	V	Z	F	P	0	2	9	1	V	C	0	2	1	5	7

WORLD MFG. IDENTIFICATION NUMBER
4VZ –CABLESS CHASSIS
4S7 –CAB CHASSIS
POSITIONS NO. 1–3

MODEL LINE
POSITION NO. 4

GVWR–BRAKE
POSITION NO. 5

ENGINE LINE
POSITION NO. 6 & 7

CAB TYPE
POSITION NO. 8

POSITION NO. 4
4VZ-CABLESS MOD

LET.	MODEL
A	K2
B	MOUNTAIN MASTE
C	HIGHLANDER
D	ALPINE
E	EXP–2001
F	EXP–2001–H SE
G	P6–S BUS
H	SCHOOL BUS
J	TOUR BUS
K	TRANSIT BUS
L	SHUTTLE BUS
M	FORWARD CONTR
N	LOW FLOOR
P	FRONT WHEEL DR
R	SPECIALTY VEHICL
S	Z2
T	BC
U	AV
V	BV
X	CV
Y	TB
Z	VECTOR 4X4
0	CFR 4X4
1	CFR 6X6
2	CHARGER
3	RANGEMASTER
4	SUMMIT

GVWR/BRAKE SYSTEM POSITION NO. 5

LET.	GVWR RANGE (IN POUNDS)	BRAKE SYSTEM	LET.	GVWR RANGE (IN POUNDS)	BRAKE SYSTEM
A	10,000–14,000	AIR	N	26,001–32,000	AIR
B	10,000–14,000	HYD	P	26,001–32,000	HYD
C	10,000–14,000	AIR/HYD	R	32,001–38,000	AIR
D	14,001–16,000	AIR	S	32,001–38,000	HYD
E	14,001–16,000	HYD	T	38,001–46,000	AIR
F	14,001–16,000	AIR/HYD	U	46,001–54,000	AIR
G	16,001–19,500	AIR	V	54,001–62,000	AIR
H	16,001–19,500	HYD	W	62,001–70,000	AIR
J	16,001–19,500	AIR/HYD	X	70,001–OVER	AIR
K	19,501–26,000	AIR			
L	19,501–26,000	HYD			
M	19,501–23,000	AIR/HYD			

CALCULATION OF A CHECK DIGIT POSITION NO. 9

V.I.N POSITION	1	2	3	4	5	6	7	8	9	10	11	12	13	14	15	16	17	
ACTUAL V.I.N.	4	V	Z	F	P	0	2	9	1	V	C	0	2	1	5	7	2	
CONVERTED VALUES (SEE TABLE)	4	5	9	6	7	0	2	9	9	5	3	0	2	1	5	7	2	
MULTIPLIER	8	7	6	5	4	3	2	10	0	9	8	7	6	5	4	3	2	
PRODUCT (VALUES X MULTIPLIER)	32	35	54	30	21	0	4	90	0	45	24	0	12	5	20	21	4	397

SUM OF PRODUCTS

CONVERTED VALUES

A = 1	N = 5
B = 2	P = 7
C = 3	R = 9
D = 4	S = 2
E = 5	T = 3
F = 6	U = 4
G = 7	V = 5
H = 8	W = 6
J = 1	X = 7
K = 2	Y = 8
L = 3	Z = 9
M = 4	

CHECK DIGIT COMPUTATION

SUM OF THE PRODUCTS (FROM ABOVE)	DIVIDED BY	EQUALS WHOLE NUMBER	+ DECIMAL
397	11	36	.0909

CHECK DIGIT

IF THE DECIMAL IS	THE CHECK DIGIT IS
.09	1
.18	2
.27	3
.36	4
.45	5
.54	6
.63	7
.72	8
.81	9
.90	X
.00	0

1 IS THE DIGIT THAT IS TO BE PLACED IN THE 9th POSITION OF THE VIN NUMBER

2

em

72

— SEQUENTIAL SERIAL NO. POSITION 12-17

— PLANT LOCATION CHARLOTTE, MI POSITION NO. 11

— MODEL YEAR POSITION NO. 10

— CHECK DIGIT POSITION NO. 9

4
DEL LINE

TER

SERIES

TROL

DRIVE
ICLE

(SU)

POSITION NO. 4
4S7-CAB MODEL LINE

LET.	MODEL
A	GLADIATOR
B	DIAMOND SERIES
C	METRO STAR
D	CHARGER
E	BARON
F	SILENT KNIGHT
G	SPECIALTY VEHICLE
H	ADVANTAGE
J	LOW PROFILE
K	GT-ONE
L	KICKER
M	CONCRETE MIXER
N	SWEEPER
P	REFUELER
R	FRONT WHEEL DRIVE
S	TR-1
T	CFR 4X4
U	CFR 6X6

POSITION NO. 8
CAB TYPE

NO.	CAPACITY
1	1 PERSON
2	2 PERSON
3	3 PERSON
4	4 PERSON
5	5 PERSON
6	6 PERSON
7	7 PERSON
8	8 PERSON
9	MULTI-PASS
0	10 PERSON

POSITION NO. 10
MODEL YEAR

YEAR	CODE
1995	S
1996	T
1997	V
1998	W
1999	X
2000	Y
2001	1
2002	2
2003	3
2004	4
2005	5

ENGINE LINE POSITION NO. 6 & 7

NUM.	MODEL	NUM.	MODEL
01	CUMMINS B5.9 160HP	50	NAVISTAR T444E 230HP
02	CUMMINS B5.9 190HP	51	NAVISTAR T444E 250HP
03	CUMMINS B5.9 210HP	52	NAVISTAR 530E 250HP
04	CUMMINS B5.9 230HP	53	NAVISTAR 530E 275HP
05	CUMMINS B5.9G 195HP	54	NAVISTAR 530E 300HP
06	CUMMINS C8.3 210HP	55	NAVISTAR 530E 320HP
07	CUMMINS C8.3 250HP	56	NAVISTAR DT466
08	CUMMINS C8.3 275HP	57	CUMMINS ISB 275HP
09	CUMMINS C8.3 300HP	58	DETROIT 8V92T 540HP
10	CUMMINS C8.3 325HP	59	DDC 6V 350HP
11	CUMMINS M11 280HP	60	CUMMINS N14E 370HP
12	CUMMINS M11 320HP	61	DDC SERIES 60 330HP (358)
13	CUMMINS M11 350HP	62	CUMMINS ISB 250HP
14	CUMMINS M11 370HP	63	CUMMINS B5.9 180HP
15	CUMMINS M11 400HP	64	VM MOTORI (DDC 638)
16	CUM. M11 CELECT PLUS 400HP	65	CUMMINS ISB 230HP
17	CUM. M11 CELECT PLUS 450HP	66	CUMMINS B5.9 175HP
18	CUMMINS M11E 320HP	67	CUMMINS B5.9 215HP
19	CUMMINS M11E 350HP	68	DETROIT 8V92T 585HP
20	CUMMINS M11E 360HP	69	DETROIT 8V92T 710HP
21	CUMMINS M11E 370HP	70	DDC SERIES 40 275HP
22	CUMMINS M11E 400HP	71	CUMMINS ISB 210HP
23	CUMMINS M11E 450HP	72	CUMMINS ISB 175HP
24	CUMMINS N14E 435HP	73	CUMMINS ISB 190HP
25	CUMMINS N14E 460HP	74	CUMMINS ISB 195HP
26	CAT 3116 210HP	75	CUMMINS ISB 215HP
27	CAT 3116 230HP	76	CATERPILLAR 3126 190HP
28	CAT 3116 250HP	77	DDC SERIES 40 330HP
29	CAT 3116 275HP	78	CUMMINS ISC 250HP
30	CAT 3116 300HP	79	CUMMINS ISC 275HP
31	CAT 3126 210HP	80	CUMMINS ISC 300HP
32	CAT 3126 230HP	81	CUMMINS ISC 330HP
33	CAT 3126 250HP	82	CUMMINS ISC 350HP
34	CAT 3126 275HP	83	CUMMINS B5.9LPG 195HP
35	CAT 3126 300HP	84	CUMMINS C8.3G 250HP
36	DDC SERIES 40 300HP	85	CUMMINS B5.9 174HP (INDUST.)
37	DDC SERIES 50 350HP	86	CUMMINS ISB 215HP (LEV)
38	DDC SERIES 60 350HP	87	
39	DDC SERIES 60 370HP	88	
40	DDC SERIES 60 400HP	89	
41	DDC SERIES 60 430HP	90	
42	DDC SERIES 60 470HP	91	
43	DDC SERIES 60 500HP	92	
44	HERCULES GTA 3.7 130HP	93	
45	HERCULES GTA 5.6 190HP	94	
46	NAVISTAR T444E 175HP	95	
47	NAVISTAR T444E 190HP	96	
48	NAVISTAR T444E 210 LOW TORQUE	97	
49	NAVISTAR T444E 210 HIGH TORQUE	98	

	REVISION	E.C.	DATE	BY
N	ADDED MODEL LINES S,T,U UNDER CAB MODEL LINE	Q5052	07OCT98	J. WERTZ
M	ADDED MODEL LINE 4 FOR SUMMIT CHASSIS	C3380	29AUG98	J. WERTZ
L	ADDED ENGINE LINE 86 FOR LEV ISB	5016	26AUG98	J. WERTZ
K	ADDED ENGINE LINE 85 FOR INDUSTRIAL B5.9	C3185	06JUN98	J. WERTZ
J	ADDED ENGINE LINES 77-84	C2947	24JAN98	J. WERTZ
H	ADDED CAT 3126 190HP TO ENGINE LINE 76	E0279	20OCT97	J. WERTZ
G3	G3-CUMMINS ISB 275HP WAS ENCORE B 275 G2-RANGEMASTER WAS RANGERMASTER G1-ADDED 71-75 ON ENGINE LINE POSITION NO. 6&7	E0154	8/5/97	H.SOMMER
F2	F2-ADDED CABLESS MODEL 3 F1-ADDED ENGINE LINE 70	C2264	24JUL97	N.HARMON
E2	E2-ADDED CABLESS MODEL T THRU 2 E1-ADDED ENG LINE 62 THRU 69	C1890	24APR97	J.WERTZ
D	ADDED CABLESS MODEL OPTION Z2	C1190	11/20/96	B.ANDREWS
C	ADDED ENGINE OPTION #61	B8501	11/11/96	B.ANDREWS
B	ADDED ENGINE OPTIONS #58, 59, & 60	C0830	8/22/96	B.ANDREWS
2	A2. REMOVED LETTER "Q" FROM GVWR CHART AND REINDEXED ACCORDINGLY A1. ADDED LETTER R - SPECIALTY VEHICLE TO 4VZ CABLESS MODEL LINE	C0748	8/1/96	B.ANDREWS
–	INITIAL RELEASE	C0652	7/1/96	B.ANDREWS

NOTES:
ANY ADMENDMENTS TO THIS INFORMATION SHALL BE SUBMITTED AT LEAST 60 DAYS BEFORE AFFIXING A VEHICLE IDENTIFICATION NUMBER UTILIZING AN AMENDED CODING.

SUBMIT TO: ADMINISTRATOR, NATIONAL HIGHWAY TRAFFIC SAFETY ADINISTRATION
400 SEVENTH STREET S.W.
WASHINGTON, D.C. 20590
ATTENTION: VIN COORDINATOR

Spartan Motors, Inc.
WORLD WIDE VEHICLES AND CHASSIS
1000 REYNOLDS RD.
CHARLOTTE, MICHIGAN 48813

REV. N

TITLE: VEHICLE IDENTIFICATION NUMBER

DRAWING NUMBER: 1997-ZZ1

3

01-022-N11B-7036

TAYLOR'S MANUFACTURING
1610 KATHLEEN AVENUE
SACRAMENTO, CALIF. 95815

(916) 922-4057
FAX (916) 922-0518

FILE

1P.

Part 565
Nov,2 1998

Position	Description	Codes
1 2 3	W.M.I.	1.T.9.
4	Frame Type	C. Channel Iron
5	Trailer Type	U Special Equip
6 7	Length in feet	12 Feet
8	Number of Axles	1.
9	Check Digit	1.
10	Year of Mfg	W.= 1998
11	Plant Location	C. Sacramento,CA.
12 13 14	W.M.I.	583
15 16 17	Production Seq.	001 Etc.

Signed: L.D. Taylor

Dated: 11/4/98

Lawrence David Taylor
Owner

1

SAE The Engineering Society For Advancing Mobility Land Sea Air and Space
INTERNATIONAL

Registration authority for ISO 3780

The Society of Automotive Engineers has been appointed by ISO to act as registration authority for the implementation of International Standard ISO 3780.

400 COMMONWEALTH DRIVE, WARRENDALE, PA 15096-0001 U.S.A.
Phone: (724) 772-8511 Fax No. (724) 776-0243
E-Mail: douds@sae.org
Web: http://www.sae.org

November 4, 1998

DANIEL TAYLOR
TAYLOR'S MFG.
1610 KATHLEEN AVENUE
SACRAMENTO, CA 95815

Dear DANIEL TAYLOR:

This letter confirms the assignment of a World Manufacturer (Maker) Identifier (WMI) Code. As the agent of the NHTSA for the assignment of manufacturer identifiers pursuant to CFR 49 Part 565 Vehicle Identification Number Requirements (VIN), we are confirming the following code:

TAYLOR'S MFG.
1610 KATHLEEN AVENUE
SACRAMENTO, CA 95815
UNITED STATES

1 T 9 with the 12th, 13th, and 14th characters of the WMI Code to be 5 8 3

T248 SANDHOG
TRAILER-MOUNTED SANDBAGGING MACHINE

Should your company name and/or the ownership of your company change, or your address or your phone number change, please be sure to notify us as soon as possible.

If you have any questions concerning the construction of this WMI Code, you may call the National Highway Traffic Safety Administration at 202/366-6018 or fax 202/366-3081.

Sincerely,

Cathy Douds
WMI Coordinator

Enclosure

cc: VIN Coordinator

2

01-022-N11B-7037

TransTeq

Transportation Techniques LLC
1705 East 39th Avenue, Denver, CO 80205
Telephone (303) 382-1041 Fax (303) 297-3990

October 29, 1998

FILE

Administrator
National Highway Traffic Safety Administration
400 Seventh Street, SW, Room 6115
Washington, DC 20590

Attn: VIN Coordinator

In accordance with ' 565.7c of CFR Part 565, *Vehicle Identification Number,* Transportation Techniques, LLC hereby submits Vehicle Identification Number (VIN) decoding information as follows:

VIN POSITION	DESCRIPTION (for BUS)	CODES (for BUS)
1,2,3	WMI (World Manufacturing Identifier)	1T9*
4	MODEL/LINE (of Bus)	S-Shuttle T-Transit
5	SERIES	M-Mall S-Suburban C-Coach (Interstate)
6	BODY TYPE	L-Single Deck – Low Floor H-Single Deck – High Floor D-Double Deck S-Specialty
7	ENGINE TYPE	H-Hybrid Electric E-Electric D-Diesel G-Gasoline
8	BRAKE SYSTEM	A-Air H-Hydraulic M-Mechanical
9	CHECK DIGIT	Calculated (49 CFR 565.4)
10	MODEL YEAR	X=1999
11	PLANT LOCATION	D=Denver
12,13,14	WMI	582*
15,16,17	SEQUENTIAL PRODUCTION NUMBER	001, 002, etc.

**This 6-character WMI was obtained from the SAE WMI Coordinator on October 22, 1998 as confirmed by the attached letter. It is our understanding that this identifier is only for buses and that other unique identifiers (WMI) will have to be assigned for other types of vehicles.*

A sample of the planned VIN for the first bus produced is attached. Please advise if the coding and our planned VIN identification are acceptable.

Sincerely,

Mark Alspaugh

Mark Alspaugh
Vice President, Operations

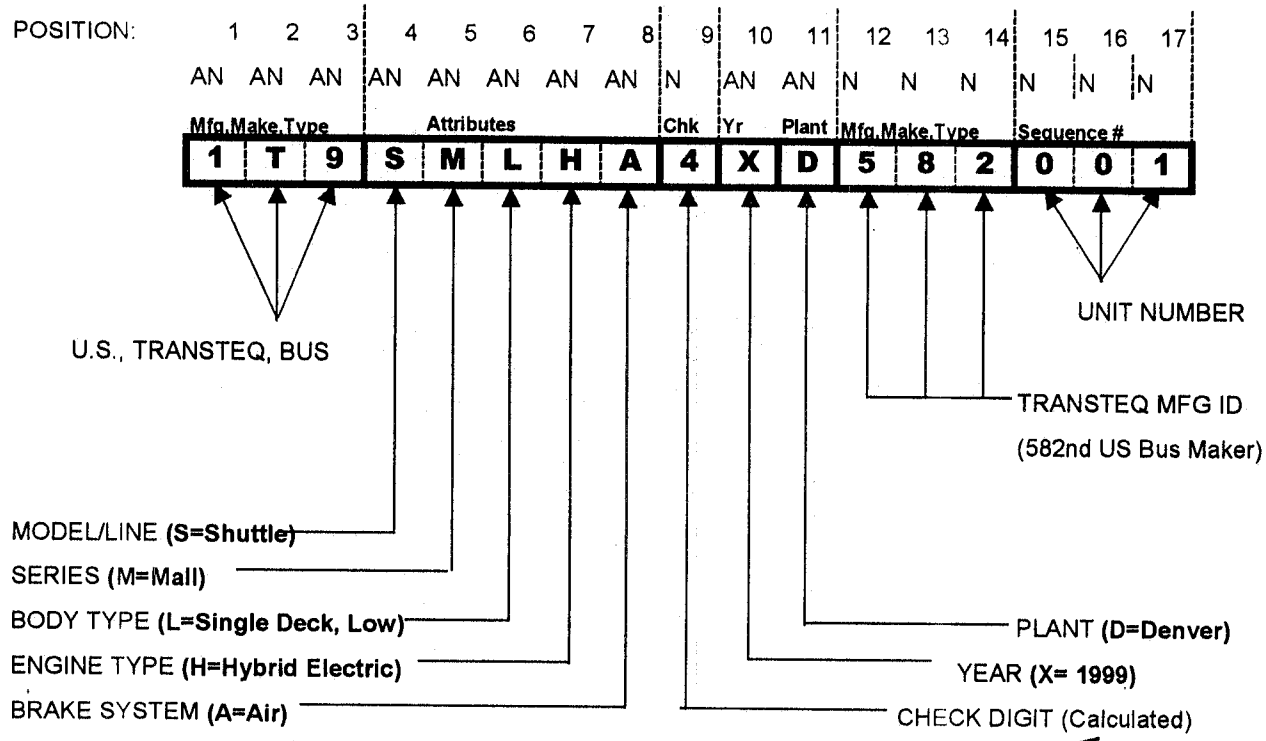

VIN	1	T	9	S	M	L	H	A	4	X	D	5	8	2	0	0	1	
Converted	1	3	9	2	4	3	8	1		7	4	5	8	2	0	0	1	
Multiplier	8	7	6	5	4	3	2	10		9	8	7	6	5	4	3	2	
Product	8	21	54	10	16	9	16	10		63	32	35	48	10	0	0	2	334

SAMPLE VIN for Unit # 001 Bus to be delivered by TransTeq

01-022-NH 95-7938

TRUCK WORLD

TRUCK WORLD, INC.
5950 GATE WAY DRIVE, JOPLIN MO 64804
PHONE: (417) 782-1976 FAX: (417) 782-2440

FILE

October 27, 1998

National Highway Traffic Safety Administration
400 Seventh Street, SW
Washington, DC 20590
Attn: VIN Coordinator

Subject: VIN Decoding Information for Truck World, Inc.

In accordance with §565.7 (c) of49 CFR Part 565, *Vehicle Identification Number*, Truck World, Inc. hereby submits Vehicle Identification Number (VIN) decoding information.

VIN POSITION:	DESCRIPTION:	CODES:
1,2 & 3	WMI	1T9
4	Trailer Type	C=Car Hauler
5	Body Type	V=Van Body
6 & 7	Length of Trailer	53=53 Feet Long
8	Number of Axles	2=2 Axles
9	Check Digit	Calculate – See 49 CFR 565.4
10	Model Year	X=1999
11	Plant Location	D=Dumas
12,13 &14	WMI	580
15,16 & 17	Sequential Production Number	001

Dumas Welding, Inc.
1010 Hwy. 54 West
P.O. Box 1055
Dumas, Ar 71639

01-22-N11B-7039

November 30, 1998

Administrator
National Highway Traffic Safety Administration
400 Seventh Street, SW
Washington, DC 20590
Attn: VIN Coordinator

FILE

Subject: VIN Decoding Information for Dumas Welding, Inc.

In accordance with 565.7(c) of 49 CFR Part 565, Vehicle Identification Number, Dumas Welding, Inc. hereby submits Vehicle Identification Number (VIN) decoding information.

VIN POSITION:	DESCRIPTION:	CODES:
1,2&3	WMI	1D9
4	Trailer Type	B=Angle Iron Bumper Pull
5	Body Type	A= Flat Bed Utility
6&7	Length of Trailer	20= 20 Feet Long
8	Number of Axles	2=2 Axles
9	Check Digit	0
10	Model Year	W=1998
11	Plant Location	D=Dumas
12,13,&14	WMI	3,9,3
15,16,&17	Sequential Production Number	001

01-22-NIIB-7040

BLOOMER TRAILER MANUFACTURING, INC.
1 BANANA RD
LA MARQUE TEXAS 77568
PHONE: 409-935-7107 FAX: 409-935-1078

P2: 28

FILE

1 pg.

Administrator
National Highway Traffic Safety Administration
400 Seventh Street, SW
Washington DC 20590
Attn: VIN Coordinator

Subject: VIN Decoding Information for BLOOMER TRAILER MFG, INC.

In accordance with 565.7 of 49 CFR Part 565, *Vehicle Identification Number,* Bloomer Trailer Mfg, Inc. hereby submits Vehicle Identification Number (VIN) decoding information.

VIN POSITION:	DESCRIPTION:	CODES:
1,2 & 3	WMI	1B9
4	TRAILER TYPE	B-BALL TYPE BALL U-Utility; L-Livestock
5	BODY TYPE	B-BUMPER PULL G-GOOSENECK
6 & 7	LENGTH OF TRAILER (ALL LENGTHS ROUNDED TO NEAREST FOOT)	
8	NUMBER OF AXLES	2=2 AXLES 3=3 AXLES
9	CHECK DIGIT	
10	MODEL YEAR	X = 1999
11	PLANT LOCATION	L-LA MARQUE
12, 13, & 14	WMI	5,1,1
15, 16, & 17	SEQUENTIAL PRODUCTION NUMBER	

BRENNER

BRENNER TANK

N3760 U.S. Highway 12 & 16
Mauston, WI 53948-9649
608-847-4131
Toll Free 800-468-0345
Fax 608-847-6857

01-22-N11B-7041

FILE

Administrator
National Highway Traffic Safety Administration
400 Seventh Street, S.W.
Room 6115
Washington, D.C. 20590

November 30, 1998

2pp

Re.: Submittal of Manufacturers Identification, WMI and VIN Scheme.

Dear Administrator:

We are resubmitting notification to NHTSA of our status as trailer manufacturers for both Brenner Tank Inc. and Brenner Tank Mauston Inc.

In July of 1996, we requested SAE to cancel the World Manufacturer Identifier, 4BU, for Bar-Bel Fabricating Company, Inc. as this company's name was being changed to Brenner Tank Mauston Inc. At the same time we requested that SAE assign the newly named, Brenner Tank Mauston Inc. the same WMI as its sister company Brenner Tank Inc. (please see the attached letters to SAE and to NHTSA). SAE correctly canceled the '4BU' WMI of Bar-bel Fabricating Company, Inc., but then incorrectly changed the name of Brenner Tank Inc. to Brenner Tank Mauston Inc. Both Brenner Tank Inc. and Brenner Tank Mauston Inc. are manufacturers of liquid bulk tank trailers and they are owned by the same parent company, Arlington Investment Corp. Both companies have been using the same WMI of 10B since 8/96.

Thank you in advance for correcting this error.

Sincerely,

Jack Rademacher

Jack Rademacher, P.E.
Chief Engineer

Enc.: WMI
VIN Scheme
Manufacturers Identification
Sample Certification Label
Owners Manual Safety Defect Notification

FOND DU LAC, WI
HARTFORD, WI
WICHITA, KS
NASHVILLE, TN
HOUSTON, TX
SALT LAKE, UT

Brenner Tank Inc. & Brenner Tank Mauston Inc. VIN System

1	0	B	F	B	7	2	X	X	X	F	0	B	1	9	8	5

POSITIONS 1,2 & 3 MAUFACTURES' UNIQUE IDENTIFIER, BRENNER TANK INC. IS 10B

FOURTH DIGIT~TYPE OF TRAILER

A = NON-CODE
B = NON-CODE ETM
C = BLANK
D = DRY BULK
E = DOT 406
F = DOT 407
G = DOT 412
V = CONTAINER CHASSIS

FIFTH DIGIT~TYPE OF MATERIAL

A = ALUMINUM
B = STAINLESS STEEL
C = CARBON STEEL

SIXTH DIGIT~GALLONAGE

0 = CONTAINER CHASSIS
A = 1000 < GALLONS
1 = 1999 < GALLONS ≥ 1000
2 = 2999 < GALLONS ≥ 2000
3 = 3999 < GALLONS ≥ 3000
4 = 4999 < GALLONS ≥ 4000
5 = 5999 < GALLONS ≥ 5000
6 = 6999 < GALLONS ≥ 6000
7 = 7999 < GALLONS ≥ 7000
8 = 8999 < GALLONS ≥ 8000
9 = 9999 < GALLONS ≥ 9000
B = ≥ 10000 GALLONS

SEVENTH DIGIT~AXLE CONFIGURATION

1 = SINGLE
2 = TANDEM
3 = TRIPLE
4 = FOUR
5 = FIVE
6 = SIX
7 = SEVEN

EIGHTH DIGIT~LENGTH OF TRAILER

NINTH DIGIT~CHECK DIGIT

VARIES WITH INDIVIDUAL SERIAL NUMBERS

LAST SIX DIGITS SERIAL NUMBER

TENTH DIGIT~VEHICLE MODEL YEAR

F = 1985	M = 1991	V = 1997	3 = 2003
G = 1986	N = 1992	W = 1998	4 = 2004
H = 1987	P = 1993	X = 1999	5 = 2005
J = 1988	R = 1994	Y = 2000	6 = 2006
K = 1989	S = 1995	1 = 2001	7 = 2007
L = 1990	T = 1996	2 = 2002	8 = 2008

ELEVENTH DIGIT PLANT LOCATION

F = FOND DU LAC
M = MAUSTON

01-22-NHB-7042

RECEIVED NSA-30

98 NOV 17 A10:1

Lawton Trailers, Inc.
1104 SW 2nd
Lawton, OK 73501
(580) 250-0117 / Fax (580) 250-0312

FILE

1 pg.

November 13, 1998

Administrator
National Highway Traffic Safety Administration
400 Seventh Street SW, Room 6115
Washington, DC 20590
Attn.: VIN Coordinator

Subject: VIN Decoding Information for Lawton Trailers, Inc.

In accordance with Subsection 565.7 (c) of 49 CFR part 565, *Vehicle Identification Number*, Lawton Trailers, Inc., hereby submits Vehicle Identification Number (VIN) decoding information.

VIN POSITION:	DESCRIPTION:	CODES:
1,2 & 3	WMI	1L9
4	Trailer Type	F=Flatbed U=Utility D=Dumper T=Tilt C=Car Hauler
5	Body Type	S=Standar P=Special E=Electric Lift
6 & 7	Length of Trailer (rounded to nearest ft)	18=18 Foot Long 20=20 Foot Long
8	Number of Axles	1=1 Axle 2=2 Axle
9	Check Digit	Calculate-See 49 CFR 565.4
10	Model Year	W=1998 Y=1999
11	Plant Location	L=Lawton
12,13 14	WMI	249
15,16 & 17	Sequential Production Number	001 002 003

FILE

Quest Manufacturing
500 Sequoia Avenue
Ontario, CA 91761
(909) 390-7070
(909) 390-7076

November 5, 1998

01-22-N11B-7043

RECEIVED NSA-30
98 NOV 17 P2:20

Administrator
National Highway Traffic Safety Administration
400 Seventh Street, SW
Washington, DC 20590

1 pg.

Attention: Vin Coordinator

Subject: VIN Decoding Information for Quest Manufacturing

In accordance in §565.7© of 49 CFR Part 565, *Vehicle Identification Number*, Quest Manufacturing submits Vehicle Identification Number (VIN) decoding information.

VIN POSITION	DESCRIPTION	CODES
1,2, & 3	WMI	129
4	Trailer Type	U=Utility T=Travel Trailer
5	Body Type	E=Enclosed S=Self Contained
6 & 7	Length of Trailer (all length rounded to nearest foot)	14=14 ft. long 08=08 ft. long
8	Number of axles	2=2 axels 3=3 axels
9	Check Digit	Calculate
10	Model Year	X=1999 Y=2000
11	Plant Location	C=California
12, 13, & 14	WMI	101

MCLELLAN EQUIPMENT, INC.

FILE

13221 Crown Avenue
Hanford, California 93230

Telephone (209) 582-8100 (800) 445-8449 Fax No. (209) 582-8155

01-22-N11B-7044

1 pg.

McLellan Trailer VIN Construction

Character #	1	2	3	4	5	6	7	8	9	10	11	12	13	14	15	16	17
VIN No. (example)	1	M	9	A	1	1	4	2	7	W	H	4	8	4	0	0	1
	WMI	WMI	WMI	Frame Type	Type of Trailer		Length in Feet	No. of Axles	Check Digit	Date Code	Plant	WMI	WMI	WMI		Production Sequence	

WMI - World Manufacturer Identifier
Frame Type - (A) Square Tube (C) Channel
Type of Trailer - (B) Boat, (C) Car, (U) Utility
Date Code -I.e. (W) 1998, (X) 1999, (Y) 2000, (1) 2001, (2) 2002
Plant - (H) Hanford, CA
Production Sequence - Sequential Number

Signed: Date: 11/10/98
Scott McLellan
Vice President

01-22-NHB-7045

RECEIVED NSA-30

98 NOV 17 P1:34 49 CFR Part 565, Vehicle Identification Number 7045

FILE

eCycle, Incorporated
4700 N. 5th Street
Reading, PA 19560
Phone: 610-939-0480
Fax: 610-939-0474
Email: sales@ecycle.com

1 pg.

Vehicle Identification Number Scheme

Position	Definition	Code	Code Meaning	Value	Weight Factor	Product VxWF
1	Manufacturer	E	eCycle, Inc.	5	8	40
2	Make	E	eCycle	5	7	35
3	Model	1	1	1	6	6
4	Type of Motorcycle	R	On-Road	18	5	90
5	Line	S	Sport	19	4	76
6	Engine Type	B	144V Permanent Magnet Motor	2	3	6
7	Net Brake HP	2	20	2	2	4
8	Net Brake HP	0		0	10	0
9	Check Digit	3				
10	Model Year	X	1999	24	9	216
11	Plant	R	Reading, PA	18	8	144
12	Production No.	0	1	0	7	0
13	Production No.	0		0	6	0
14	Production No.	0		0	5	0
15	Production No.	0		0	4	0
16	Production No.	0		0	3	0
17	Production No.	1		1	2	2

Signed: M. Gary Helm

Date: 11/12/98

M. Gary Helm
Typed Name

President
Capacity of Signatory

01-22-N11B-7046

Waterman Welding

Box 41 • KANAB, UTAH 84741 • Phone (435) 644-5729

FILE

1 pg.

11/12/98

Administrator
National Highway Traffic Safety Administration
400 Seventh Street, SW
Washington, DC 20590

Attention: Orris

Subject: VIN Decoding Information for WATER*MAN WELDING

In accordance with 565.7 (C) of 49 CFR Part 565, Vehicle Identification Number (VIN) decoding information.

VIN POSITION:	DESCRIPTION:	CODES:
1,2&3	WMI	1W9
4	Trailer Type	U=Utility
5	Body Type	C=Closed In F=Flatbed
6&7	Length Trailer (All lengths rounded to nearest foot)	12=12 Feet Long 13=13 Feet Long
8	Number Axles	1=1 Axles 2=2 Axles
9	Check Digit	Calculate
10	Model Year	W=1998 X=1999
11	Plant Location	K=Kanab
12,13&14	WMI	6,4,0
15,16&17	Sequential Production Number	001 002

01-22-N11B-7047

FILE

SOUTHWEST GOOSENECK, LTD

343 GEMBLER ROAD
SAN ANTONIO, TX 78219

98 NOV 25 AM 10:29
RECEIVED NSA-30

November 13, 1998

1 pg.

National Highway Traffic Safety Administration
NSA 30, Room 6111
400 Seventh Street, SW
Washington, D. C. 20590

Attention: VIN Coordinator

Subject: VIN Decoding Information for Southwest Gooseneck, LTD

In accordance with §565.7(c) of 49 CFR Part 565, Vehicle Identification Number, Southwest Gooseneck, LTD hereby submits Vehicle Information Number (VIN) decoding information:

VIN POSITION	DESCRIPTION	CODES
1, 2 & 3	WMI	1 S 9
4	Trailer Type	B = Box (Dump Bed) C = Car Hauler D = Drop Deck E = Equipment Hauler F = Flat U = Utility
5	Body Type	B = Bumper Pull F = Fifth Wheel G = Gooseneck P = Pintle Eye
6 & 7	Length of Trailer (Rounded to nearest foot)	26 = 26 09 = 09
8	Number of Axles	3 = 3 Axles 4 = 4 Axles
9	Check Digit	Calculate – SEE 49 CFR 565.4
10	Model Year	W = 1998 X = 1999
11	Plant Location	S = San Antonio
12, 13 & 14	WMI	6, 8, 3
15, 16, & 17	Sequential Production Number	001 002

01-22-N11B-7048

RECEIVED NSA-30

98 NOV 25 P1:15

FILE

HASSELL FABRICATION INC.
300 DEAD INDIAN RD
ASHLAND ORE. 97520
PH 541 482-8730
FX 541 488-2642

November 3, 1998

Administrator
National Highway Traffic Safety Administration
400 Seventh St SW Rm 6116-A
Washington, DC 20590

1 pg.

attn: VIN Coordinator

Subject: VIN Decoding Information for Hassell Fab. Inc.

In accordance with 565.7(c) of 49 CFR Part 565, *Vehicle Identification Number,* Hassell Fab. Inc hereby submits Vehicle Identification Number (VIN) decoding information.

VIN POSITION:	DESCRIPTION:	CODES:
1,2 & 3	WMI	1H9
4	Trailer type	T= Transfer Dump F= Flat Bed
5	Body Type	F= Fabricated Steel Frame
6 & 7	Length of Trailer	23= 23Feet (ex)
8	Number of Axles	2=2 Axles 3=3 Axles 4=4 Axles
9	Check Digit	Formula
10	Model Year	V= 1997 W=1998 X= 1999
11	Plant Location	A= Ashland
12, 13 &14	WMI	341
15, 16 & 17	Production Sequence	001... etc

FILE

K&K

Welding, Tire & Auto

1304 US Bypass South ~ Griffin, GA 30224
Phone (770) 228-9974 ~ Fax (770) 228-7573

01-22-N11B-7049

98 NOV 30 P1:45
RECEIVED NHSA-30

November 23, 1998

Administrator
National Hwy Traffic Safety Administration
400 Seventh St., SW
Washington, DC 20590
Att: VIN Coordinator

1 pg.

Subject: VIN Decoding Information for K & K Welding

In accordance with #565.7(c) of 49 CFR Part 565, Vehicle Identification Number, K & K Welding hereby submits Vehicle Identification Number (VIN) decoding information.

VIN POSITION:	DESCRIPTION:	CODES:
1, 2 & 3	WMI	1K9
4	Trailer Type	U=Utility L=Landscape C=Custom E=Equipment D=Dump
5	GVWR	Table II – Page 19
6 & 7	Length of Trailer	07=07 Feet Long 20=20 Feet Long
8	Number of Axles	1=1 Axle 2=2 Axles
9	Check Digit	Calculate – See 49 CFR 565.4
10	Model Year	W=1998 X=1999
11	Plant Location	A=Main Plant in Griffin
12, 13 & 14	WMI	175
15,16 & 17	Sequential Prod. Num.	001 002

Michael L. Kimbell

Michael L. Kimbell, Owner
K & K Welding

Jindo Corporation
371-62, Kasan-Dong
Kumchon-Gu
Seoul 153-023, Korea
Tel: 82-2-850-8440/8

01-22-NIIB-7050

FILE

THE INFORMATION OF V.I.N.

7pp

The VI.N. shall consist of four sections of characters which shall be grouped accordingly ;

the third section

1	2	3	-	4	5	6	7	8	-	9	-	10	11	12	13	14	15	16	17

the first section — the second section — the fourth section

1.The first section (WMI by SAE)

The first section shall consist of three characters that occupy positions one through three(1-3)

1	*2*	*3*	-	4	5	6	7	8	-	9	-	10	11	12	13	14	15	16	17

1-1)Character 1 ; Nationality

Code	Nationality
K	Korea

1-2)Character 2 ; Manufacturer

Code	Manufacturer
R	Jindo Corporation

1-3)Character 3 ; Vehicle type

Code	Vehicle type
1	Semi trailer

2.The second section

The second section shall consist of five characters, which occupy positions four through eight(4-8) in the V.I.N.

1	2	3	-	*4*	*5*	*6*	*7*	*8*	-	9	-	10	11	12	13	14	15	16	17

2-1)Character 4 ; Trailer type

1	2	3	-	*4*	5	6	7	8	-	9	-	10	11	12	13	14	15	16	17

Code	Trailer type
B	Bulk trailer
C	Combination container chassis
D	Dump trailer
F	Full trailer
G	***Gooseneck container chassis***
L	Low bed trailer
M	Car carrying trailer
P	Plat form trailer
S	***Straight frame chassis***
T	Tank trailer
V	Van trailer
I	Insulation trailer
R	Refrigerator trailer
W	Plat form wall trailer
1	Crane tractor
2	Crane truck

2-2)Character 5 ; Body type

1	2	3	-	4	5	6	7	8	-	9	-	10	11	12	13	14	15	16	17

2-2-1)Application

Combination container chassis ; C ; wheel base

Gooseneck container chassis; G ; "

Plat form trailer ; P ; "

Van trailer ; V ; "

Insulation trailer ; I ; "

Refrigerator trailer ; R ; "

Dump trailer ; D ; "

Crane tractor ; 1 ; "

Crane truck ; 2 ; "

Coil trailer ; ; "

(UNIT;MM)

CODE	WHEEL BASE	REMARK
A	6300	
B	6300-6800	500M/M
C	6800-7300	"
D	7300-7800	"
E	7800-7950	150M/M
F	7950-8100	"
G	8100-8250	"
H	8250-8400	"
J	8400-8550	"
K	8550-8700	"
L	8700-8850	"
M	8850-9000	"
N	9000-9150	"
P	9150-9300	"
R	9300-9450	"
S	9450-9600	"
T	9600-9750	"
U	9750-9900	"
V	*OVER 9900-*	"

2-2-2)Application

Straight frame chassis ; S ; Wheel base

(UNIT ;MM)

CODE	WHEEL BASE	REMARK
A	4250	
B	4400-4550	150M/M
C	4550-4700	"
D	4700-4850	"
E	4850-4900	"
F	4900-5000	100M/M
G	5000-5130	130M/M
H	5130-5300	170M/M
J	5300-5450	150M/M
K	5450-5600	"
L	5600-5750	"
M	***OVER 5750***	

2-3,4)Character 6,7 ; Length in feet

1	2	3	-	4	5	*6*	*7*	8	-	9	-	10	11	12	13	14	15	16	17

Character 6 code	Character 7 code	Length in fleet
2	*3*	***23ft slider container chassis***
4	*0*	***40ft gooseneck container chassis***

2-5)Character 8 ; Number of axle

1	2	3	-	4	5	6	7	*8*	-	9	-	10	11	12	13	14	15	16	17

CODE	Number of axle
2	***2 AXLE***
3	3 AXLE

3.The third section

The third section shall consist of one character, which occupies position nine(9) the V.I.N. This section shall be the check digit whose purpose is to provide a means for verifying the accuracy of any V.I.N. transcription.

After all other characters in V.I.N. have been determined by the manufacturer, the check digit shall be calculated by carrying out the mathematical computation specified in paragraphs"3-1-1)" through "3-1-4)"of this section.

3-1)Character 9 ; check digit

1	2	3	-	4	5	6	7	8	-	9	-	10	11	12	13	14	15	16	17

3-1-1)Assign to each number in the V.I.N. its actual mathematical value and assign to each letter the value specified for it in table 1,as follow;

Table 1

Assigned values

A = 1	J = 1	T = 3
B = 2	K = 2	U = 4
C = 3	L = 3	V = 5
D = 4	M = 4	W = 6
E = 5	N = 5	X = 7
F = 6	P = 7	Y = 8
G = 7	R = 9	Z = 9
H = 8	S = 2	

3-1-2)Multiply the assigned value for each character in the V.I.N.by the position weight factor specified in the table 2, as follows;

Table 2

V.I.N. position

1st----------8	
2nd----------7	
3rd----------6	11th----------8
4th----------5	12th----------7
5th----------4	13th----------6
6th----------3	14th----------5
7th----------2	15th----------4
8th---------10	16th----------3
9th-(check digit)	17th----------2
10th----------9	

3-1-3)Add the resulting products and divide the total by 11.

3-1-4)The numerical remainder is the check digit. If the remainder is 10, the letter"X" shall be used to designate the check digit. The correct numeric remainder, zero through nine(0-9) or the letter "X",shall appear in V.I.N. position nine(9)

3-1-5) A sample check digit calculation is shown in table 3 as follows

Table 3

Calculation of a check digit

V.I.N. positions	1	2	3	4	5	6	7	8	9	10	11	12	13	14	15	16	17	Sum
V.I.N.	K	R	1	G	V	4	0	2	1	X	D	1	0	0	0	0	1	
Assigned value	2	9	1	7	5	4	0	2	0	7	4	1	0	0	0	0	1	
Weight factor	8	7	6	5	4	3	2	10	0	9	8	7	6	5	4	3	2	
Add products	16	63	6	35	20	12	0	20	0	63	32	7	0	0	0	0	2	276
Divide sum by 11 i.e.; 276/11= 25 1/11. The numerator is "1"(1 is 9th digit of V.I.N)																		

4.The fourth section

The fourth section shall consist of eight characters, which occupy positions ten through seventeen(10-17) of the V.I.N.

1	2	3	-	4	5	6	7	8	-	9	-	*10*	*11*	*12*	*13*	*14*	*15*	*16*	*17*

4-1)Character 10 ; Model year(yea of manufacture)

CODE	YEAR	CODE	YEAR
A	1980	T	1996
B	1981	V	1997
C	1982	W	1998
D	1983	*X*	*1999*
E	1984	Y	2000
F	1985	1	2001
G	1986	2	2002
H	1987	3	2003
J	1988	4	2004
K	1989	5	2005
L	1990	6	2006
M	1991	7	2007
N	1992	8	2008
P	1993	9	2009
R	1994	A	2010
S	1995		

4-2)Character 11 ; Location of manufacture

1	2	3	-	4	5	6	7	8	-	9	-	10	*11*	12	13	14	15	16	17

CODE	Location of manufacture
D	*Dowha-dong Nam-Ku Inchon,Korea*
U	

4-3,8)Character 12-17 ; serial number

1	2	3	-	4	5	6	7	8	-	9	-	10	11	*12*	*13*	*14*	*15*	*16*	*17*

The third through the eighth characters of the fourth section shall represent the number sequentially assigned by the manufacturer in the production process