ORIGINAL

01-22 n11-B — 3285

Dear Sir,
Enclosed is our v.i.n. app.
To clarify it ,will add this note.

Series--- B= bumper pull type trailer
G=goose neck type trailer(5th wheeltype)
Type--- L=live stock trailer
T= --- =industrial type flat bed
Plant location= A--- =Armour, S.D.
Length=length of trailer without hitch
Our assigned no. are 1 T 9 & 221

Thank you,

Trail Rite Trailers.
Box # 491, Armour, S.D. zip.57313
Phone # 605-724 2340

W.B. Mulder
owner

W Ben Mulder

2pgs

1st. sect | 2nd sect | 3rd sect | Sample U.M. Stanbury (1989)

1	T	9	L	B	2	0	2		K	A	2	2	1	0	2	0

B 6/19/89 pdg

- W.M.I
- (type) Livestock
- series. Bumper Pull
- (Length) total ft. excluding hitch
- No. of axles
- ck. digit
- yr. 1989
- Plant Location
- trailer under 500 units
- Armour, S.D.
- Sequence No.

Series B = Bumper pull
G = Gooseneck [redacted]

type. L = Livestock = L
F = industrial = F

Plant Location.
A = Armour

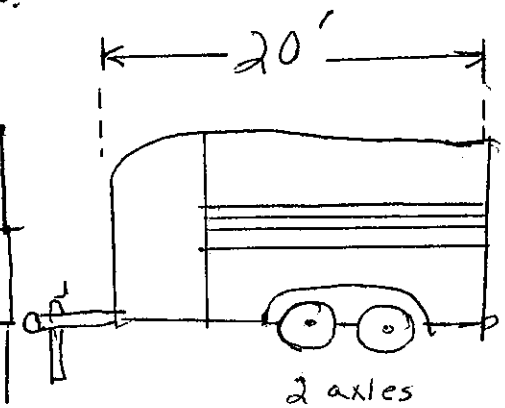

V.I.N	1	T	9	L	B	2	0	2	8	K	A	2	2	1	0	2	0
Value	1	3	9	2	2	2	0	2		2	1	2	2	1	0	2	0
factor x	8x	7x	6x	5x	4x	3x	2x	10x		9x	8x	7x	6x	5x	4x	3x	2x

8 + 21 + 54 + 15 + 8 + 6 + 0 + 20 + 18 + 8 + 14 + 12 + 5 + 0 + 6 + 0 = 195 ÷ 11 = 17.72

195 ÷ 11 = 17.72 = 8 ck. digit #

.09 = 1
.18 = 2
.27 = 3
.36 = 4
.45 = 5
.54 = 6
.63 = 7
.72 = 8

.81 = 9
.90 = X
.00 = 0

Dear Sir