U.S. Department
of Transportation

**National Highway
Traffic Safety
Administration**

400 Seventh Street, S.W.
Washington, D.C. 20590

Dear Crash Data Researchers/Users:

Thank you for choosing crash data from the National Highway Traffic Safety Administration (NHTSA) for your research or other use. The information contained in this motor vehicle crash report is collected, maintained and distributed in accordance with Public Law 89-564. In accordance with this Public Law, NHTSA is required not to release any case information until completion of quality control procedures. These procedures include a review of the case material to extract all names, licenses and registration numbers, non-coded interview material, non-research related researcher comments in the margins, non-factual data, and the production number portion of the vehicle identification number (VIN).

If you requested NHTSA to query its database files in order to identify a specific crash, then that query was made using non-personal descriptors you provided for use in our search. This motor vehicle crash may have been identified from a data search and matches the general, non-personal descriptors you provided, but we cannot confirm that this is the specific crash report you requested.

If you have any questions with regard to the above procedures, please contact the Field Operations Branch, Crash Investigation Division, National Center for Statistics and Analysis at 202-366-4820. Again, please be advised that we cannot confirm that this is the case that you have specifically requested nor can we certify the information to be correct.

*** *** ***

Get it together!
SAFETY BELTS SAVE LIVES

AUTO SAFETY HOTLINE
(800) 424-9393
Wash. D.C. Area 366-0123

U.S. Department of Transportation
National Highway Traffic Safety Administration

PEDESTRIAN CASE SUMMARY

NATIONAL ACCIDENT SAMPLING SYSTEM
PEDESTRIAN CRASH DATA STUDY

PSU 82 CASE NO. 624 P TYPE OF ACCIDENT Large Pickup Truck/Pedestrian walking

A. DESCRIPTION OF THE ACCIDENT SEQUENCE AND ACCIDENT PECULIARITIES

(Provide a summary of the accident sequence as well as any particular event of the accident that is noteworthy. Pedestrian injury mechanism and vehicle interaction is the focus, not pedestrian or driver culpability. Do not include any personal identifiers.)

Vehicle #1 was northbound on a 2-lane, 2-way street and was crossing through an intersection when the front of Vehicle #1 impacted the left side of a pedestrian walking in the north crosswalk of the intersection. Vehicle #1 locked up the brakes, pedestrian wrapped to the hood edge and then was thrown ahead of Vehicle #1 as it stopped.

B. PEDESTRIAN PROFILE

Pedestrian No.	Age	Sex	Treatment/ Mortality	Most Severe Injury (TO BE COMPLETED BY ZONE CENTER)			
				Body Region	Ana. Struc.	AIS	Injury Source
01	42	Female	Hospitalized	chest (Rib Fx)	Fracture	3	hood edge

Body Region

Head
Face
Throat
Chest
Abdomen/Pelvis
Spine
Upper Extremity
Lower Extremity
External

Type of Anatomic Structure

Whole Area
Vessels
Nerves
Organs
Skeletal
Head-LOC
Skin-Burn
Skin-Other

Abbreviated Injury Scale

(1) Minor injury
(2) Moderate injury
(3) Serious injury
(4) Severe injury
(5) Critical injury
(6) Maximum (untreatable)
(7) Injured, unknown severity

C. VEHICLE PROFILE

Vehicle No.	Class of Vehicle	Year/Make/Model	Most Severe Damage Based on Vehicle Inspection	
			Damage Plane	Damage Description
01	Pickup Truck	96/Ford/F250	Front	Minor - dents, smears

DO NOT SANITIZE THIS FORM

HS Form 0435E (8/95)

U.S. Department of Transportation

National Highway Traffic Safety Administration

ACCIDENT COLLISION DIAGRAM

NATIONAL ACCIDENT SAMPLING SYSTEM
PEDESTRIAN CRASH DATA STUDY

PSU No. 82
Case Number—Stratum 624 P

Indicate North

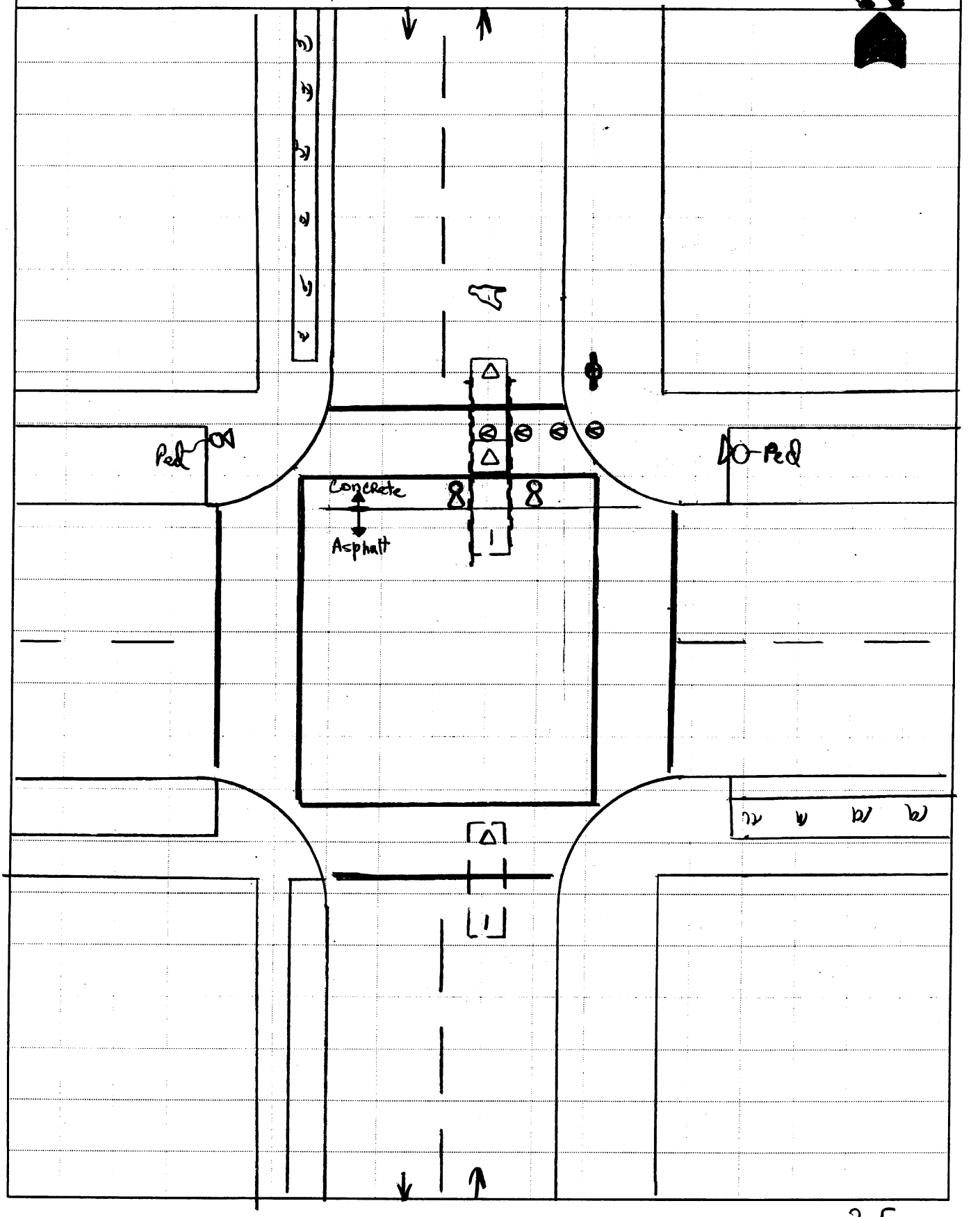

HS Form 431B (8/95)

Scale: 1 centimeter = 2.5 meters

U.S. Department of Transportation
National Highway Traffic Safety Administration

ACCIDENT COLLISION DIAGRAM

NATIONAL ACCIDENT SAMPLING SYSTEM
CRASHWORTHINESS DATA SYSTEM

PSU No. ____ Case Number—Stratum 624P

Indicate North

RP

A	9.2 S	4.4 W
B	8.1 S	2.65 W
C	.4 S	4.3 W
D	.4 S	2.5 W
POI	2.9 S	3.55 W
Final Rest Ped	3.6 N	3.5 W

Front VI based on overturning

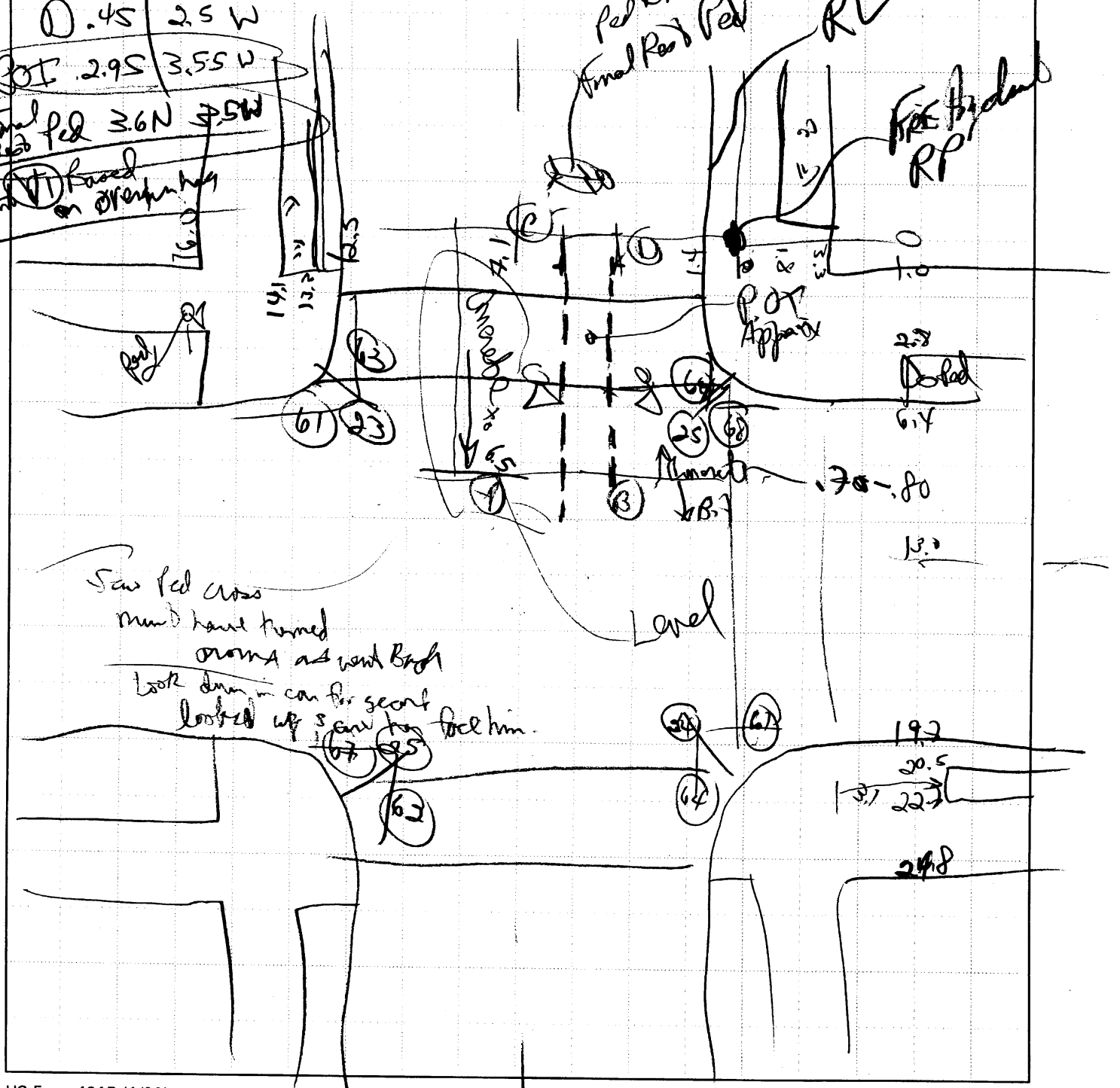

HS Form 431B (1/93)

Scale: 1 centimeter = 1 meter - (1/100)

U.S. Department of Transportation
National Highway Traffic Safety Administration

PEDESTRIAN ACCIDENT COLLISION MEASUREMENT TABLE

NATIONAL ACCIDENT SAMPLING SYSTEM
PEDESTRIAN CRASH DATA STUDY

Primary Sampling Unit Number 82 Case Number-Stratum 6 2 4 P

PEDESTRIAN ACCIDENT COLLISION DATA COLLECTION

- document reference point and reference line relative to physical features
- documentation of all accident induced physical evidence including (if applicable):
  - a) vehicle skid marks
  - b) pedestrian contacts with ground or object
  - c) vehicle/pedestrian point of impact (POI)
  - d) location of pedestrian separation point from vehicle
  - f) final resting points (FRP) for pedestrian and vehicle
- documentation of the physical plant including:
  - a) all road/roadway delineation (e.g., crosswalks, curb/edge lines, lane markings, medians, pavement markings, parked vehicles, poles, signs, etc.)
  - b) all traffic controls (e.g., lights, signs)

Surface Type: Asphalt/Concrete
Surface Condition: Dry
Coefficient of Friction: .70-.80
Grade (v/h) Measurement
a) at impact: 0/122
b) between impact and final rest: 0/122
Pedestrian Travel Direction: West
Vehicle Travel Direction: North
Number of Travel Lanes: 2

SCALED DIAGRAM

- north arrow placed on diagram
- grade measurements for all applicable roadways
- scaled representations of the physical plant including:
  - a) all road/roadway delineation (e.g., crosswalks, curb/edge lines, lane markings, medians, pavement markings, parked vehicles, poles, signs, etc.)
  - b) all traffic controls (e.g., lights, signs)
- scaled representations of the vehicle and pedestrian at pre-impact, impact, and final rest based upon either:
  - a) physical evidence, or
  - b) reconstructed accident dynamics

Reference Point: Fire Hydrant on N.E. corner of Intersection
Reference Line: Foot Curb Edge

Item	Distance and Direction from Reference Point	Distance and Direction from Reference Line
(V1) Lock up Skid Marks		
— L.F. Begins	9.2 S	4.4 W
— L.F. Ends	.4 S	4.3 W
— R.F. Begins	8.1 S	2.6 W
— R.F. Ends	.4 S	2.5 W
P.O.I. ≈ approx	2.9 S	3.55 W
Final Rest Ped	3.6 N	3.5 W
Front overhang (V1) .85M → Front (V1) to Final Rest/P.O.I.		

HS Form 0435F (8/95)

U.S. Department of Transportation
National Highway Traffic Safety Administration

PEDESTRIAN ACCIDENT FORM

NATIONAL ACCIDENT SAMPLING SYSTEM
PEDESTRIAN CRASH DATA STUDY

1. Primary Sampling Unit Number 82
2. Case Number - Stratum 6 24 P

IDENTIFICATION

3. Number of General Vehicle Forms Submitted 0 1
4. Date of Accident (Month,Day,Year) [redacted] / [redacted] / 9 7
5. Time of Accident 0836

Code reported military time of accident.

NOTE: Midnight = 2400
Unknown = 9999

SPECIAL STUDIES - INDICATORS

Check (✓) each special study (SS15-SS19 below) that has been completed; code 1 for the checked special studies and 0 for the special studies not checked.

6. ___ SS15 Administrative Use 0
7. ✓ SS16 Pedestrian Crash Data Study 1
8. ___ SS17 Impact Fires 0
9. ___ SS18 _____ 0
10. ___ SS19 _____ 0

NUMBER OF EVENTS

11. Number of Recorded Events in This Accident 0 1

PEDESTRIAN STUDY CRITERIA

Pedestrian Definition:

Any person who is on a trafficway or on a sidewalk or path contiguous with a trafficway, or on private property (e.g., parking lot). Note: Pedestrians include persons who are in contact with the ground, roadway, etc. and are pushing carts, wagons, etc. or holding on to a vehicle.

Persons in or on a nonmotorist conveyance are not pedestrians and are excluded from this study. A nonmotorist conveyance is defined as any human powered device by which a nonmotorist may move, or by which a pedestrian or nonmotorist may move another nonmotorist. A nonmotorist conveyance for purposes of this study includes the following: bicycles, baby carriages, roller skates/blades, push carts, scooters, wheelchairs, animals, etc. For example, persons on a bicycle/scooter, roller skating/blading, in a baby carriage/push cart/wheelchair or on a horse are excluded.

Case Selection Criteria:

A forward moving, late model year (VEH04 equals 90 to 95) CDS applicable vehicle (VEH07 equals 01 to 49) must strike a pedestrian.

The striking portion of the vehicle structure must be original equipment manufacturer (OEM) without previous damage and or parts removed in the impact area. For example, vehicles equipped with deer guards, winches, snow plows, etc. or previously damaged in the impact area are excluded.

The pedestrian may not be lying or sitting.

The pedestrian impact(s) are the vehicle's only impact(s). If multiple pedestrians are impacted, each pedestrian shall be a separate case.

The first point of contact between the late model year, CDS applicable vehicle and the pedestrian must be forward of the top of the A pillar.

PEDESTRIAN ACCIDENT EVENTS

Accident Event Sequence Number	Vehicle Number	Class Of Vehicle	General Area of Damage	Vehicle Number or Object Contacted	Class Of Vehicle	General Area of Damage
12. 0 1	13. 0 1	14. 15	15. F	16. 7 2	17. 0 0	18. 0

CODES FOR CLASS OF VEHICLE

(00) Not a motor vehicle
(01) Subcompact/mini (wheelbase < 254 cm)
(02) Compact (wheelbase ≥ 254 but < 265 cm)
(03) Intermediate (wheelbase ≥ 265 but < 278 cm)
(04) Full size (wheelbase ≥ 278 but < 291 cm)
(05) Largest (wheelbase ≥ 291 cm)
(09) Unknown passenger car size
(11) Compact utility vehicle
(12) Large utility vehicle (≤ 4,500 kgs GVWR)
(13) Passenger van (≤ 4,500 kgs GVWR)
(14) Other van (≤ 4,500 kgs GVWR)
(15) Pickup truck (≤ 4,500 kgs GVWR)
(18) Other truck (≤ 4,500 kgs GVWR)
(19) Unknown light truck type

CODES FOR GENERAL AREA OF DAMAGE (GAD)

CDS APPLICABLE VEHICLES

(F) Front
(R) Right side
(L) Left side
(U) Undercarriage
(9) Unknown

CODES FOR VEHICLE NUMBER OR OBJECT CONTACTED

Collision with Nonfixed Object

(72) Pedestrian

U.S. Department of Transportation
National Highway Traffic Safety Administration

PEDESTRIAN ASSESSMENT FORM

Form Approved
O.M.B. No. 2127-0021
NATIONAL ACCIDENT SAMPLING SYSTEM
PEDESTRIAN CRASH DATA STUDY

1. Primary Sampling Unit Number 82

2. Case Number - Stratum 624 P

3. Pedestrian Number 0 1

10. Pedestrian's Weight 073
Code actual weight to the nearest kilogram.
(999) Unknown
160 pounds X .4536 = ___ kilograms

PEDESTRIAN'S CHARACTERISTICS

4. Pedestrian's Age 42
Code actual age at time of accident.
(00) Less than one year old (specify by month): _____
(97) 97 years and older
(99) Unknown

5. Pedestrian's Sex 2
(1) Male
(2) Female - not reported pregnant
(3) Female - pregnant-1st trimester (1st-3rd month)
(4) Female - pregnant-2nd trimester (4th-6th month)
(5) Female - pregnant-3rd trimester (7th-9th month)
(6) Female - pregnant-term unknown
(9) Unknown

6. Pedestrian's Overall Height 165
Code actual height to the nearest centimeter.
(999) Unknown
65 inches X 2.54 = ___ centimeters

7. Pedestrian's Height - Ground to Knee 47 ~~99~~
Code to the nearest centimeter. 47.0
(999) Unknown
___ inches X 2.54 = ___ centimeters

8. Pedestrian's Height - Ground to Hip 087 ~~999~~
Code to the nearest centimeter. 87.4
(999) Unknown
___ inches X 2.54 = ___ centimeters

9. Pedestrian's Height - Ground to Shoulder 135 ~~999~~
Code to the nearest centimeter. 134.9
(999) Unknown
___ inches X 2.54 = ___ centimeters

PEDESTRIAN'S PRE-AVOIDANCE ACTIONS

11. Pedestrian Attitude 1
(1) Standing
(2) Crouching
(3) Kneeling
(4) Bending at waist
(8) Other (specify): _____
(9) Unknown

12. Pedestrian Motion 1
(0) Not moving
(1) Walking slowly
(2) Walking rapidly
(3) Running or jogging
(4) Hopping
(5) Skipping
(6) Jumping
(7) Falling/stumbling or rising
(8) Other (specify): _____
(9) Unknown

13. Pedestrian's Action Relative to Vehicle 01
(00) Stopped
(01) Crossing road, straight
(02) Crossing road, diagonally
(03) Moving in road, with traffic
(04) Moving in road, against traffic
(05) Off road, approaching road
(06) Off road, going away from road
(07) Off road, moving parallel
(08) Off road, crossing driveway
(09) Off road, moving along driveway
(98) Other (specify): _____
(99) Unknown

14. Pedestrian's Body (Chest) Orientation Relative to Striking Vehicle Prior to Avoidance Actions 3
(1) Facing vehicle
(2) Facing away
(3) Left side to vehicle
(4) Right side to vehicle
(8) Other (specify): _____
(9) Unknown

z.c. % chart

HS Form 435H (7/95) This report is authorized by P.L. 89-563, Title 1, Section 106, 108, and 112. While you are not required to respond, your cooperation is needed to make the results of this data collection effort comprehensive, accurate and timely.

PEDESTRIAN'S AVOIDANCE ACTIONS

15. Pedestrian's First Avoidance Actions 00
    (00) No avoidance actions
    (01) Stopped
    (02) Accelerated pace
    (03) Ran away (along vehicle path)
    (04) Jumped
    (05) Turned toward vehicle
    (06) Turned away from vehicle
    (07) Dove or fell away

    Used hand(s) to :
    (11) Vault corner of vehicle
    (12) Vault onto vehicle
    (13) Brace against vehicle
    (14) Crouched and braced hands against vehicle
    (98) Other (specify): _____
    (99) Unknown

PEDESTRIAN'S ORIENTATION AT IMPACT

16. Pedestrian's Head Orientation at Initial Impact 1
    (1) To front
    (2) To left
    (3) To right
    (4) Up
    (5) Down
    (8) Other (specify):_____
    (9) Unknown

17. Pedestrian's Body (Chest) Orientation at Initial Impact 3
    (1) Facing vehicle
    (2) Facing away
    (3) Left side to vehicle
    (4) Right side to vehicle
    (8) Other (specify):_____
    (9) Unknown

18. Pedestrian's Arm Orientation at Initial Impact 11
    (01) At sides
    (02) Folded across chest
    (03) Hands clasped behind back
    (04) Hands on hips
    (05) Hands in pockets

    One or both arms:
    (06) Extended upward
    (07) Extended to side
    (08) Extended forward bracing
    (09) Extended, holding object (briefcase, suitcase, etc.)
    (10) Holding object (young child, grocery bag, etc.) in arm(s)
    (11) Holding object (young child, grocery bag, etc.) on shoulder(s) or head
    (98) Other (specify):_____
    (99) Unknown

19. Pedestrian's Leg Orientation at Initial Impact 99
    (01) Together
    (02) Apart-laterally
    (03) Apart-right leg forward
    (04) Apart-left leg forward
    (05) Apart- forward leg unknown
    (06) Left foot off the ground
    (07) Right foot off the ground
    (08) Both feet off the ground
    (98) Other (specify):_____ 05
    (99) Unknown

20. Vehicle/Pedestrian's Interaction ~~01~~
    (01) Carried by vehicle, wrapped position
    (02) Carried by vehicle, slid to windshield
    (03) Carried by vehicle, position unknown
    (04) Passed over vehicle top
    (05) Thrown straight forward
    (06) Thrown forward and left of vehicle
    (07) Thrown forward and right of vehicle
    (08) Knocked to pavement, forward
    (09) Knocked to pavement, left of vehicle
    (10) Knocked to pavement, right of vehicle
    (11) Knocked to pavement, run over or dragged by vehicle
    (12) Shunted to left (corner impacts only)
    (13) Shunted to right (corner impacts only)
    (14) Bumped or pushed aside
    (15) Snagged, rotated
    (16) Snagged, dragged by vehicle
    (17) Foot or legs run over
    (98) Other (specify):_____
    (99) Unknown

OFFICIAL RECORDS

21. Police Reported Alcohol Presence For Pedestrian 0
    (0) No alcohol present
    (1) Yes alcohol present
    (7) Not reported
    (9) Unknown

22. Alcohol Test Result For Pedestrian 00
    Code actual value (decimal implied before first digit—0.xx)
    (95) Test refused
    (96) None given
    (97) AC (Alcohol Content) test performed, results unknown
    (99) Unknown if test given

    Source: Medical Records

23. Police Reported Other Drug Presence For Pedestrian 9
    (0) No other drug(s) present
    (1) Yes other drug(s) present
    (7) Not reported
    (9) Unknown

24. Other Drug Specimen Test Result For Pedestrian 9
    (0) No specimen test given
    (1) Drug not found in specimen
    (2) Drug found in specimen, (specify):_____
    (3) Specimen test given, results unknown or not obtained
    (9) Unknown

INJURY CONSEQUENCES

25. Injury Severity (Police Rating) 9
    (0) O - No injury
    (1) C - Possible injury
    (2) B - Nonincapacitating injury
    (3) A - Incapacitating injury
    (4) K - Killed
    (5) U - Injury, severity unknown
    (6) Died prior to accident
    (9) Unknown

    Police arrived 20 min after Ped leaving

26. Treatment - Mortality 3
    (0) No treatment
    (1) Fatal
    (2) Fatal - ruled disease (specify):_____

    Nonfatal
    (3) Hospitalization
    (4) Transported and released
    (5) Treatment at scene - non-transported
    (6) Treatment later
    (8) Treatment - other (specify):_____
    (9) Unknown

27. Type Of Medical Facility (for Initial Treatment) 1
    (0) Not treated at a medical facility
    (1) Trauma center
    (2) Hospital
    (3) Medical clinic
    (4) Physician's office
    (5) Treatment later at medical facility
    (8) Other (specify):_____
    (9) Unknown

28. Hospital Stay 02
    (00) Not Hospitalized
    ____ Code the number of days (up through 60) that the pedestrian stayed in a hospital.
    (61) 61 days or more
    (99) Unknown

29. Working Days Lost 99
    ____ Code the number of days (up through 60) that the pedestrian lost from work due to the accident
    (00) No working days lost
    (61) 61 days or more
    (62) Fatally injured
    (97) Not working prior to accident
    (99) Unknown

STOP - VARIABLES 30 THROUGH 37 ARE COMPLETED BY THE ZONE CENTER

30. Glasgow Coma Scale (GCS) Score (at Medical Facility) 15
    (00) Not injured
    (01) Injured - not treated at medical facility
    (02) No GCS Score at medical facility
    (03-15) Code the actual value of the initial GCS Score recorded at medical facility.
    (97) Injured, details unknown
    (99) Unknown if injured

31. Was the Pedestrian Given Blood? 1
    (1) No - blood not given
    (2) Yes - blood given (specify units):_____
    (9) Unknown if blood given

32. Arterial Blood Gases (ABG) – HCO_3 01
    (00) Not injured
    (01) Injured, ABGs not measured or reported
    (02-50) Code the actual value of the HCO_3
    (96) ABGs reported , HCO_3 unknown
    (97) Injured, details unknown
    (99) Unknown if injured

33. Time to Death 00
    ____ Code number of hours from time of accident to time of death up through 24 hours. If time of death is greater than 24 hours, code number of days. (Note: 1 day =31, 2 days = 32, ... n days = 30 +n up through 30 days = 60)
    (00) Not fatal
    (96) Fatal - ruled disease
    (99) Unknown

34. 1st Medically Reported Cause of Death 00

35. 2nd Medically Reported Cause of Death 00

36. 3rd Medically Reported Cause of Death 00
    ____ Code the Pedestrian Injury from line number(s) for the medically reported injury(s) which reportedly contributed to this pedestrian's death
    (00) Not fatal or no additional causes
    (96) Mode of death given but specific injuries are not linked to cause of death. (specify):
    _____
    (97) Other result (includes fatal ruled disease) (specify):_____
    (99) Unknown

37. Number of Recorded Injuries for This Pedestrian 08
    ____ Code the actual number of injuries recorded for this pedestrian.
    (00) No recorded injuries
    (97) Injured, details unknown
    (99) Unknown if injured

ARE ALL APPLICABLE MEDICAL RECORDS INCLUDED WITH INITIAL SUBMISSION?

NO [ ] YES [✓]

UPDATE CANDIDATE? NO [✓] YES [ ]

U.S. Department of Transportation

National Highway Traffic Safety Administration

PEDESTRIAN INJURY FORM

Form Approved
O.M.B. No. 2127-0021

NATIONAL ACCIDENT SAMPLING SYSTEM
PEDESTRIAN CRASH DATA STUDY

1. Primary Sampling Unit Number	82	3. Pedestrian Number	0 1
2. Case Number - Stratum	6 24 P	4. Blank	X X

INJURY DATA

Record below the actual injuries sustained by this pedestrian in **CHRONOLOGICAL** order that were identified from the official and unofficial data sources. Remember not to double count an injury just because it was identified from two different sources. If greater than twenty-five injuries have been documented, encode the balance on the Pedestrian Injury Supplement.

	Source of Injury Data	AIS-90 Body Region	AIS-90 Type of Anatomic Structure	AIS-90 Specific Anatomic Structure	AIS-90 Level of Injury	AIS-90 A.I.S. Severity	AIS-90 Aspect	Injury Source	Injury Source Confidence Level	Direct/ Indirect Injury	Striking Profile	Type Of Damage	Damage Depth
1st	5. 7	6. 7	7. 9	8. 04	9. 02	10. 1	11. 2	12. 703	13. 1	14. 1	15. 3	16. 3	17. 3
2nd	18. 2	19. 4	20. 5	21. 02	22. 30	23. 3	24. 2	25. 703	26. 1	27. 1	28. 3	29. 3	30. 3
3rd	31. 3	32. 8	33. 9	34. 02	35. 02	36. 1	37. 1	38. 947	39. 1	40. 1	41. 0	42. 0	43. 0
4th	44. 7	45. 8	46. 9	47. 02	48. 02	49. 1	50. 1	51. 947	52. 1	53. 1	54. 0	55. 0	56. 0
5th	57. 3	58. 8	59. 9	60. 02	61. 02	62. 1	63. 1	64. 947	65. 1	66. 1	67. 0	68. 0	69. 0
6th	70. 7	71. 2	72. 9	73. 06	74. 02	75. 1	76. 7	77. 947	78. 1	79. 1	80. 0	81. 0	82. 0
7th	83. 3	84. 1	85. 9	86. 04	87. 02	88. 1	89. 5	90. 947	91. 1	92. 1	93. 0	94. 0	95. 0
8th	96. 3	97. 1	98. 9	99. 02	100. 02	101. 1	102. 5	103. 947	104. 1	105. 1	106. 0	107. 0	108. 0
9th	109.	110.	111.	112.	113.	114.	115.	116.	117.	118.	119.	120.	121.
10th	122.	123.	124.	125.	126.	127.	128.	129.	130.	131.	132.	133.	134.

HS Form 0435I (10/95)

This report is authorized by P.L. 89-563, Title 1, Section 106, 108, and 112. While you are not required to respond, your cooperation is needed to make the results of this data collection effort comprehensive, accurate, and timely.

PEDESTRIAN INJURY DATA

	Source of Injury Data	AIS-90 Body Region	AIS-90 Type of Anatomic Structure	AIS-90 Specific Anatomic Structure	AIS-90 Level of Injury	AIS-90 A.I.S. Severity	AIS-90 Aspect	Injury Source	Injury Source Confidence Level	Direct/ Indirect Injury	Striking Profile	Type Of Damage	Damage Depth
11th													
12th													
13th													
14th													
15th													
16th													
17th													
18th													
19th													
20th													
21st													
22nd													
23rd													
24th													
25th													

OFFICIAL INJURY DATA — SOFT TISSUE INJURIES

Indicate the Location, Specific Anatomic Structure, Detail (size, depth, fracture type, head injury clinical signs and neurological deficits), and Source of all injuries indicated by official sources (or from PAR or other unofficial sources if medical records and interviewee data are unavailable.)

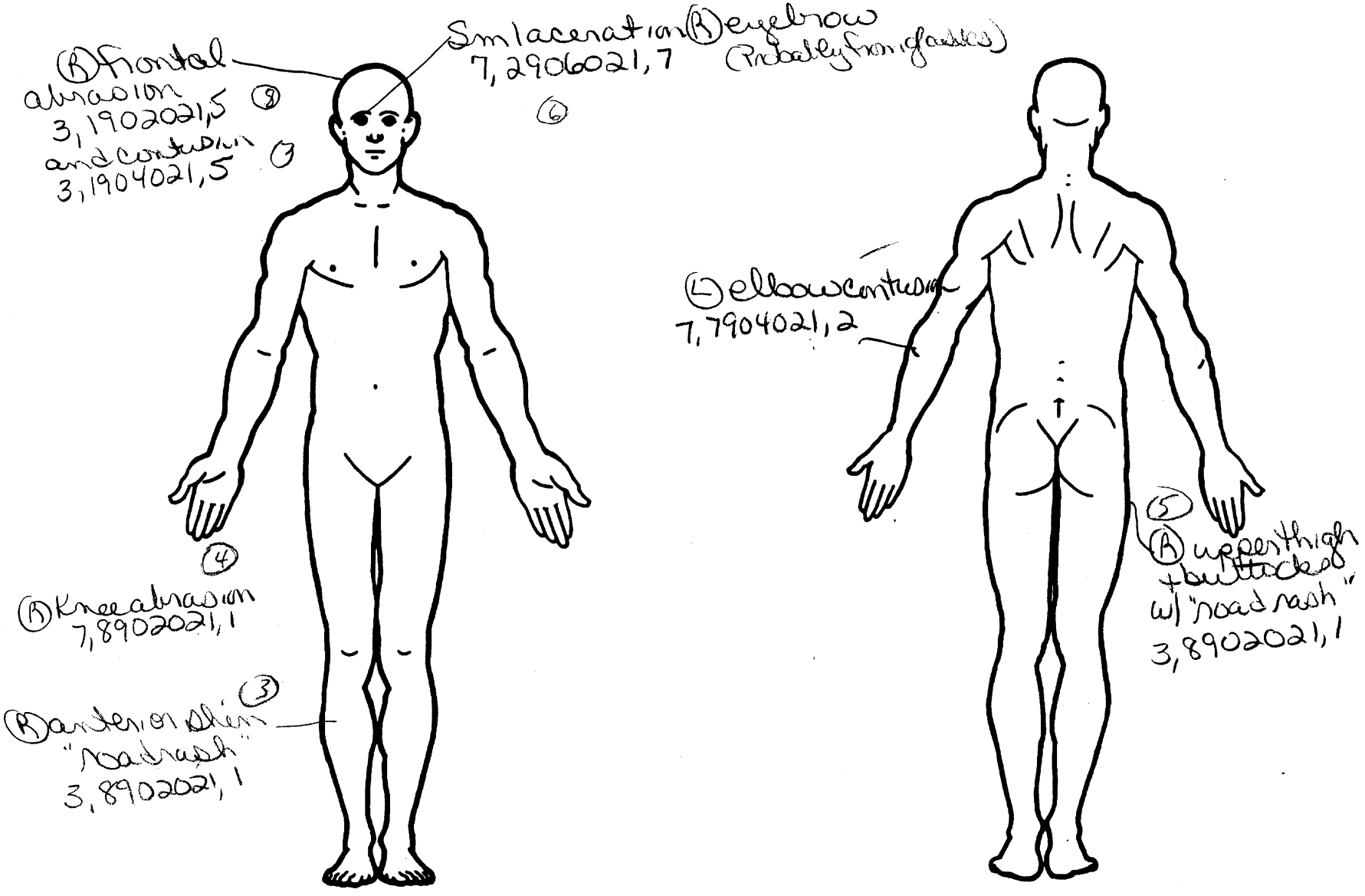

SOURCE OF INJURY DATA

OFFICIAL

(1) Autopsy records with or without hospital/ medical records
(2) Hospital/medical records other than emergency room (e.g., discharge summary)
(3) Emergency room records only (including associated X-rays or other lab reports)
(4) Private physician, walk-in or emergency clinic

UNOFFICIAL

(5) Lay coroner report
(6) E.M.S. personnel
(7) Interviewee
(8) Other source (specify): _____
(9) Police

INJURY SOURCE CONFIDENCE LEVEL

(1) Certain
(2) Probable
(3) Possible
(9) Unknown

DIRECT/INDIRECT INJURY

(1) Direct contact injury
(2) Indirect contact injury
(3) Noncontact injury
(7) Injured, unknown source

STRIKING PROFILE

(0) Injury not from vehicle contact
(1) Flat-Narrow (<15 centimeters)
(2) Flat-Wide (≥ 15 centimeters)
(3) Rounded (contoured)
(4) Rounded edge
(5) Sharp edge
(8) Other (specify): _____
(9) Unknown

TYPE OF DAMAGE

(0) Injury not from vehicle contact
(1) No damage/contact
(2) Scratch (Scuff, Cloth Transfer,Smear)
(3) Dent
(4) Large deformation
(5) Cracked, fractured, shattered
(6) Separated from vehicle
(7) Noncontact injury
(8) Other specify: _____
(9) Unknown

DAMAGE DEPTH

(0) Injury not from vehicle contact
(1) No residual damage
(2) Surface only damage
(3) Crush depth >0 to 2 centimeters
(4) Crush depth >2 to 5 centimeters
(5) Crush depth >5 to 10 centimeters
(8) Other specify: _____
(9) Unknown

PEDESTRIAN INJURY CLASSIFICATION

Body Region

(1) Head
(2) Face
(3) Neck
(4) Thorax
(5) Abdomen
(6) Spine
(7) Upper Extremity
(8) Lower Extremity
(9) Unspecified

Type of Anatomic Structure

(1) Whole Area
(2) Vessels
(3) Nerves
(4) Organs (includes muscles/ ligaments)
(5) Skeletal (includes joints)
(6) Head - LOC
(9) Skin

Specific Anatomic Structure

Whole Area
(02) Skin - Abrasion
(04) Skin - Contusion
(06) Skin - Laceration
(08) Skin - Avulsion
(10) Amputation
(20) Burn
(30) Crush
(40) Degloving
(50) Injury - NFS
(90) Trauma, other than mechanical

Head - LOC
(02) Length of LOC
(04, 06, 08) Level of Consciousness
(10) Concussion

Spine
(02) Cervical
(04) Thoracic
(06) Lumbar

Vessels, Nerves, Organs, Bones, Joints are assigned consecutive two digit numbers beginning with 02

Level of Injury

Specific injuries are assigned consecutive two-digit numbers beginning with 02.

To the extent possible, within the organizational framework of the AIS, 00 is assigned to an injury NFS as to severity or where only one injury is given in the dictionary for that anatomic structure. 99 is assigned to any injury NFS as to lesion or severity.

Abbreviated Injury Scale

(1) Minor injury
(2) Moderate injury
(3) Serious injury
(4) Severe injury
(5) Critical injury
(6) Maximum (untreatable)
(7) Injured, unknown severity

Aspect

(1) Right
(2) Left
(3) Bilateral
(4) Central
(5) Anterior
(6) Posterior
(7) Superior
(8) Inferior
(9) Unknown
(0) Whole region

INJURY SOURCE

FRONT
700 Front bumper
701 Front lower valance/spoiler
702 Front grille
703 Hood edge and/or trim
704 Hood ornament (fixed)
705 Hood ornament (spring loaded)
706 Headlight
707 Retractable headlight door (Open/Closed)
708 Turn signal/parking lights
718 Other front or add on object (specify): _____
719 Unknown front object

Left Side Components
720 Front fender side surface
721 Front antenna
722 A1 pillar
723 A2 pillar
724 B pillar
725 C pillar
726 D pillar
728 Other pillar (specify): _____
729 Left side roof rail
730 Left side door surface
731 Left side door handle
732 Left side mirror fixed housing
733 Left side folding mirror
734 Left side glazing forward of B pillar
735 Left side glazing rearward of B pillar
736 Left side back fender or quarter panel
737 Rear antenna
738 Other left side object (specify): _____
739 Unknown left side component

Right Side Components
740 Front fender side surface
741 Front antenna
742 A1 pillar
743 A2 pillar
744 B pillar
745 C pillar
746 D pillar
748 Other pillar (specify): _____
749 Right side roof rail
750 Right side door surface
751 Right side door handle
752 Right side mirror fixed housing
753 Right side folding mirror
754 Right side glazing forward of B pillar
755 Right side glazing rearward of B pillar
756 Rear antenna
757 Rear fender or quarter panel
758 Other right side object (specify): _____
759 Unknown right side component

Back Components
760 Rear (back) bumper
761 Tailgate
762 Hatchback, vertical surface
768 Other back component (specify): _____
769 Unknown back component

Top Components
770 Hood surface
771 Hood surface reinforced by under hood component
772 Front fender top surface
773 Cowl area
774 Wiper blade & mountings
775 Windshield glazing
776 Front header
777 Roof surface
778 Backlight glazing
779 Rear header
780 Hatchback
781 Rear trunk lid
788 Other top component (specify): _____
789 Unknown top component

Wheels / tires
790 Left front wheel / tire
791 Right front wheel / tire
792 Left rear wheel / tire
793 Right rear wheel /tire
798 Other wheel / tire (specify): _____
799 Unknown wheel / tire

Undercarriage components
800 Front crossmember
801 Steering assembly/Front suspension
802 Oil pan
803 Exhaust system pipe
804 Transmission
805 Drive shaft
806 Catalytic converter
807 Muffler
808 Floor pan
809 Fuel tank
810 Rear suspension
818 Other undercarriage component (specify): _____
819 Unknown undercarriage component

Accessories
820 Air scoop, deflector
821 Cellular or CB radio antenna
822 Emergency lights or bar
823 Fog lights
824 Luggage, ski, or bike rack
825 Cargo (specify): _____
826 Spare tire
827 Spotlight
828 Other accessory (specify): _____

Other Object or Vehicle in Environment
947 Ground
948 Other object (specify): _____
949 Unknown object in environment
959 Unknown object on contacting vehicle
997 Noncontact injury source
999 Unknown injury source

OFFICIAL INJURY DATA — SKELETAL INJURIES

Restrained?

___ No

___ Yes

Indicate the Location, Specific Anatomic Structure, Detail (size, depth, fracture type, head injury clinical signs and neurological deficits), and Source of all injuries indicated by official sources (or from PAR or other unofficial sources if medical records and interviewee data are unavailable.)

Blood Alcohol Level (mg/dl)

BAL = Ø

Glasgow Coma Scale Score

GCSS = 15

Units of Blood Given

Units = ____

Arterial Blood Gases

Ph = __.__

PO_2 = ____

PCO_2 ____

HCO_3 ____

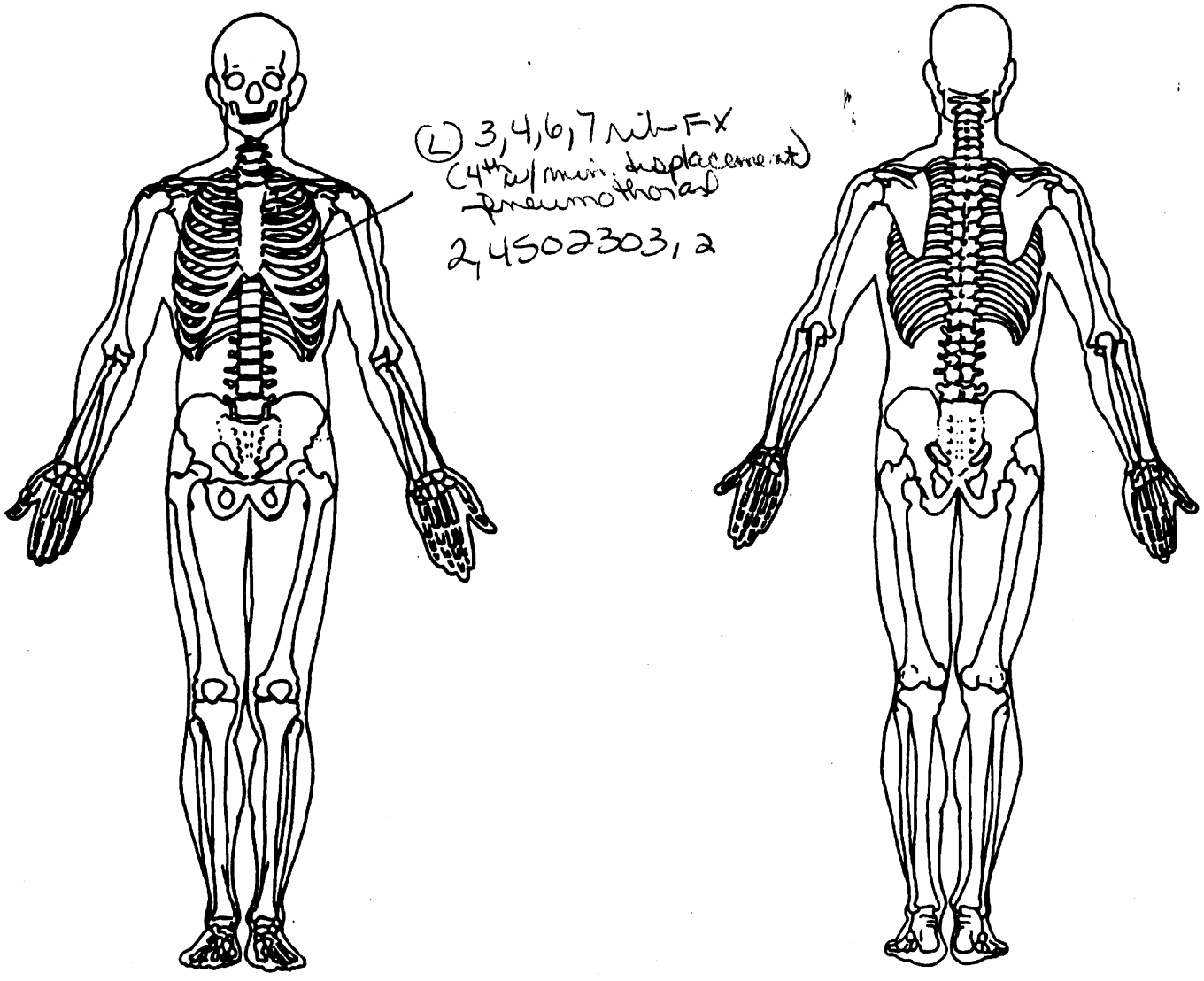

OFFICIAL INJURY DATA —INTERNAL INJURIES

Indicate the Location, Specific Anatomic Structure, Detail (size, depth, fracture type, head injury clinical signs and neurological deficits), and Source of all injuries indicated by official sources (or from PAR or other unofficial sources if medical records and interviewee data are unavailable.)

-LOC

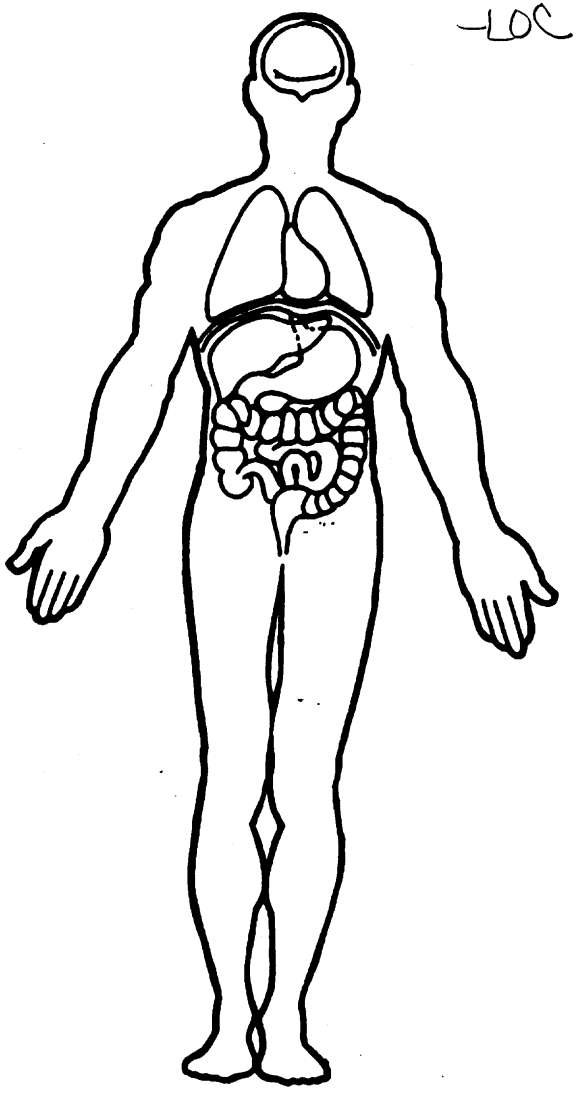

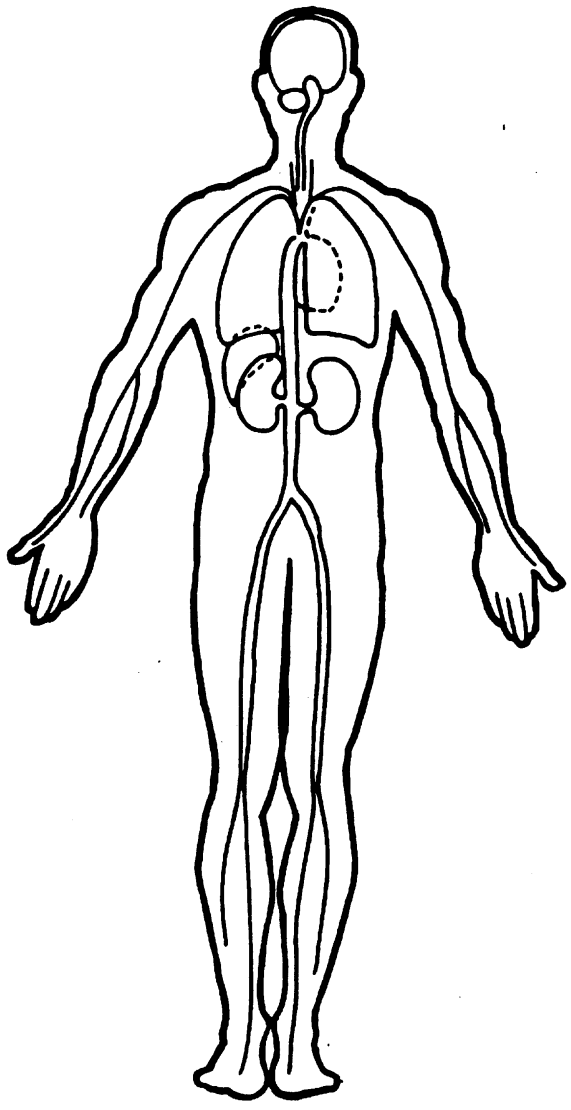

U.S. Department of Transportation
National Highway Traffic Safety Administration

PEDESTRIAN GENERAL VEHICLE FORM

NATIONAL ACCIDENT SAMPLING SYSTEM
PEDESTRIAN CRASH DATA STUDY

1. Primary Sampling Unit Number 82
2. Case Number - Stratum 6 24 P
3. Vehicle Number 0 1

VEHICLE IDENTIFICATION

4. Vehicle Model Year 96
   Code the last two digits of the model year
   (99) Unknown

5. Vehicle Make (specify): 12
   FORD
   Applicable codes are found in your NASS PCDS Data Collection, Coding and Editing Manual.
   (99) Unknown

6. Vehicle Model (specify): 481
   Truck - 250 XL
   Applicable codes are found in your NASS PCDS Data Collection, Coding and Editing Manual.
   (999) Unknown

7. Body Type 31
   Note: Applicable codes may be found on the back of this page.

8. Vehicle Identification Number
   2FTEF25N4TC[redacted]
   1 2 3 4 5 6 7 8 9 10 11 12 13 14 15 16 17

   Left justify; Slash zeros and letter Z (Ø and Ƶ)
   No VIN—Code all zeros
   Unknown—Code all nines

OFFICIAL RECORDS

9. Police Reported Travel Speed 999
   Code to the nearest kmph (NOTE: 000 means less than 0.5 kmph)
   (160) 159.5 kmph and above
   (999) Unknown

   ___ mph X 1.6093 = ___ kmph

10. Speed Limit 040
    (000) No statutory limit
    Code posted or statutory speed limit in kmph
    (999) Unknown

    25 mph X 1.6093 = ___ kmph

11. Police Reported Alcohol Presence For Driver 0
    (0) No alcohol present
    (1) Yes alcohol present
    (7) Not reported
    (8) No driver present
    (9) Unknown

12. Alcohol Test Result For Driver 00 96
    Code actual value (decimal implied before first digit—0.xx)
    (95) Test refused
    (96) None given
    (97) AC (Alcohol Content) test performed, results unknown
    (98) No driver present
    (99) Unknown

    Source: PAR med

13. Police Reported Other Drug Presence For Driver 0
    (0) No other drug(s) present
    (1) Yes other drug(s) present
    (7) Not reported
    (8) No driver present
    (9) Unknown

14. Other Drug Specimen Test Result For Driver 0
    (0) No specimen test given
    (1) Drug not found in specimen
    (2) Drug found in specimen (specify): ___
    (3) Specimen test given, results unknown or not obtained
    (8) No driver present
    (9) Unknown

CODES FOR BODY TYPE

CDS APPLICABLE VEHICLES

Automobiles

(01) Convertible (excludes sun-roof, t-bar)
(02) 2-door sedan, hardtop, coupe
(03) 3-door/2-door hatchback
(04) 4-door sedan, hardtop
(05) 5-door/4-door hatchback
(06) Station wagon (excluding van and truck based)
(07) Hatchback, number of doors unknown
(08) Other automobile type (specify):
_____
(09) Unknown automobile type

Automobile Derivatives

(10) Auto based pickup (includes El Camino, Caballero, Ranchero, Brat, and Rabbit pickup)
(11) Auto based panel (cargo station wagon, auto based ambulance/hearse)
(12) Large limousine - more than four side doors or stretched chassis
(13) Three-wheel automobile or automobile derivative

Utility Vehicles (≤ 4,500 kgs GVWR)

(14) Compact utility (Jeep CJ-2 - CJ-7, Scrambler, Golden Eagle, Renegade, Laredo, Wrangler, Cherokee [84 and after], Dispatcher, Raider, Bronco II, Bronco [76 and before], Explorer, S-10 Blazer, Geo Tracker, Bravada, S-15 Jimmy, Thing, Pathfinder, Trooper, Trooper II, Rodeo, Amigo, Navajo, 4-Runner, Montero, Samurai, Sidekick, Rocky)
(15) Large utility (includes Jeep Cherokee [83 and before], Ramcharger, Trailduster, Bronco-fullsize [78 and after], fullsize Blazer, fullsize Jimmy, Landcruiser, Rover, Scout)
(16) Utility station wagon (Chevy Suburban, GMC Suburban, Travelall, Grand Wagoneer, includes suburban limousine)
(19) Utility, unknown body type

Van Based Light Trucks (≤ 4,500 kgs GVWR)

(20) Minivan (Chrysler Town and Country, Caravan, Grand Caravan, Voyager, Grand Voyager, Mini-Ram, Dodge/Plymouth Vista, Aerostar, Villager, Lumina APV, Trans Sport, Silhouette, Astro, Safari, Toyota Van, Toyota Minivan, Previa, Nissan Minivan, Quest, Mitsubishi Minivan, Vanagon/Camper.)
(21) Large van (B150-B350, Sportsman, Royal, Maxiwagon, Ram, Tradesman, Voyager [83 and before], E150-E350, Econoline, Clubwagon, Chateau, G10-G30, Chevy Van, Beauville, Sport Van, G15-G35, Rally Van, Vandura.)
(22) Step van or walk-in van (≤ 4,500 kgs GVWR)
(23) Van based motorhome (≤ 4,500 kgs GVWR)
(24) Van based school bus (≤ 4,500 kgs GVWR)
(25) Van based other bus (≤ 4,500 kgs GVWR)
(28) Other van type (Hi-Cube Van, Kary) (specify):
_____
(29) Unknown van type

Light Conventional Trucks (Pickup style cab, ≤ 4,500 kgs GVWR)

(30) Compact pickup (D50, Colt P/U, Ram 50, Dakota, Arrow Pickup [foreign], Ranger, Courier, S-10 , T-10, LUV, S-15, T-15, Sonoma, Datsun/Nissan Pickup, P'up, Mazda Pickup, Toyota Pickup, Mitsubishi Pickup)
(31) Large Pickup (Jeep Pickup, Comanche, Ram Pickup, D100-D350, W100-W350, F100-F350, C10-C35, K10-K35, R10-R35, V10-V35, Silverado, Sierra, R100-R500,)
(32) Pickup with slide-in camper
(33) Convertible pickup
(39) Unknown pickup style light conventional truck type

Other Light Trucks (≤ 4,500 kgs GVWR)

(40) Cab chassis based (includes rescue vehicles, light stake, dump, and tow truck)
(41) Truck based panel
(42) Light truck based motorhome (chassis mounted)
(45) Other light conventional truck type
(48) Unknown light truck type
(49) Unknown light vehicle type (automobile, utility, van, or light truck)

OTHER VEHICLES

Buses (Excludes Van Based)

(50) School bus (designed to carry students, not cross country or transit)
(58) Other bus type (e.g., transit, intercity, bus based motorhome) (specify):
_____
(59) Unknown bus type

Medium/Heavy Trucks (> 4,500 kgs GVWR)

(60) Step van (> 4,500 kgs GVWR)
(61) Single unit straight truck (4,500 kgs < GVWR ≤ 8,850 kgs)
(62) Single unit straight truck (8,850 kgs < GVWR ≤ 12,000 kgs)
(63) Single unit straight truck (> 12,000 kgs GVWR)
(64) Single unit straight truck, GVWR unknown
(65) Medium/heavy truck based motorhome
(67) Truck-tractor with no cargo trailer
(68) Truck-tractor pulling one trailer
(69) Truck-tractor pulling two or more trailers
(70) Truck-tractor (unknown if pulling trailer)
(78) Unknown medium/heavy truck type
(79) Unknown truck type (light/medium/heavy)

Motored Cycles (Does Not Include All-Terrain Vehicles/Cycles)

(80) Motorcycle
(81) Moped (motorized bicycle)
(82) Three-wheel motorcycle or moped
(88) Other motored cycle (minibike, motorscooter) (specify):_____
(89) Unknown motored cycle type

Other Vehicles

(90) ATV (All-Terrain Vehicle) and ATC (All-Terrain Cycle)
(91) Snowmobile
(92) Farm equipment other than trucks
(93) Construction equipment other than trucks
(97) Other vehicle type
(99) Unknown body type

VEHICLE WEIGHT ITEMS

15. Vehicle Curb Weight 2,Ø5 0
    ____ Code weight to nearest 10 kilograms.
    (045) Less than 450 kilograms
    (610) 6,100 kilograms or more
    (999) Unknown

4320 SW
+100 V8
+100
4520

4520 lbs X .4536 = 2050 kgs

Source: 96 [redacted] pg 243

16. Vehicle Cargo Weight ØØ5 0
    ____ Code weight to nearest 10 kilograms.
    (000) Less than 5 kilograms
    (450) 4,500 kilograms or more
    (999) Unknown

100 lbs X .4536 = 45 kgs

OTHER DATA

17. Vehicle Special Use (This Trip) Ø
    (0) No special use
    (1) Taxi
    (2) Vehicle used as school bus
    (3) Vehicle used as other bus
    (4) Military
    (5) Police
    (6) Ambulance
    (7) Fire truck or car
    (8) Other (specify): _____
    (9) Unknown

STOP - VARIABLES 18 THROUGH 20 ARE COMPLETED BY THE ZONE CENTER

RECONSTRUCTION DATA

18. Impact Speed ⊕027
    _____ Nearest kmph
    (NOTE: 000 means greater than .5 kmph)
    (160) 159.5 kmph and above
    (999) Unknown

19. Accuracy Range of Impact Speed Estimate 1
    (0) No reconstruction
    (1) Less than 2 kmph
    (2) ≥ 2 kmph and ≤ 8 kmph
    (3) ≥ 9 kmph and ≤ 16 kmph
    (4) ≥ 17 kmph and ≤ 26 kmph
    (9) Unknown

20. Data Source of Impact Speed 1
    (0) No impact speed calculated
    (1) Zone center calculation
    (2) Police calculation
    (3) Driver/witness/police estimates

PRECRASH DATA

21. Driver's Attention to Driving 8
    (Prior to Recognition of Critical Event)
    (1) Full attention to driving
    (2) Distracted by other occupant
    (3) Distracted by moving object in vehicle
    (4) Distracted by outside person, object, or event
    (5) Talking on cellular phone or CB radio Specify: _____
    (6) Sleeping or dozing while driving
    (8) Other (specify): Looking in car for something
    (9) Unknown

22. Pre-Event Vehicle Movement Ø1
    (Prior to Recognition of Critical Event)
    (01) Going straight
    (02) Slowing or stopping in traffic lane
    (03) Starting in traffic lane
    (04) Stopped in traffic lane
    (05) Passing or overtaking another vehicle
    (06) Disabled or parked in travel lane
    (07) Leaving a parking position
    (08) Entering a parking position
    (09) Turning right
    (10) Turning left
    (11) Making a U-turn
    (12) Backing up (other than for parking position)
    (13) Negotiating a curve
    (14) Changing lanes
    (15) Merging
    (16) Successful avoidance maneuver to a previous critical event
    (97) Other (specify): _____
    (98) No driver present
    (99) Unknown

23. Critical Precrash Event 80

This Vehicle Loss of Control Due To:

(01) Blow out or flat tire
(02) Stalled engine
(03) Disabling vehicle failure (e.g., wheel fell off) (specify): _____
(04) Non-disabling vehicle problem (e.g., hood flew up) (specify): _____
(05) Poor road conditions (puddle, pot hole, ice, etc.) (specify): _____
(06) Traveling too fast for conditions
(08) Other cause of control loss (specify): _____
(09) Unknown cause of control loss

This Vehicle Traveling

(10) Over the lane line on left side of travel lane
(11) Over the lane line on right side of travel lane
(12) Off the edge of the road on the left side
(13) Off the edge of the road on the right side
(14) End departure
(15) Turning left at intersection
(16) Turning right at intersection
(17) Crossing over (passing through) intersection
(19) Unknown travel direction

Other Motor Vehicle In Lane

(50) Stopped
(51) Traveling in same direction with lower speed (i.e., lower steady speed or decelerating)
(52) Traveling in same direction with higher speed
(53) Traveling in opposite direction
(54) In crossover
(55) Backing
(59) Unknown travel direction of other motor vehicle in lane

Other Motor Vehicle Encroaching Into Lane

(60) From adjacent lane (same direction)—over left lane line
(61) From adjacent lane (same direction)—over right lane line
(62) From opposite direction—over left lane line
(63) From opposite direction—over right lane line
(64) From parking lane
(65) From crossing street, turning into same direction
(66) From crossing street, across path
(67) From crossing street, turning into opposite direction
(68) From crossing street, intended path not known
(70) From driveway, turning into same direction
(71) From driveway, across path
(72) From driveway, turning into opposite direction
(73) From driveway, intended path not known
(74) From entrance to limited access highway
(78) Encroachment by other vehicle—details unknown

Pedestrian or Pedalcyclist, or Other Nonmotorist

(80) Pedestrian in roadway
(81) Pedestrian approaching roadway
(82) Pedestrian—unknown location
(83) Pedalcyclist or other nonmotorist in roadway (specify): _____
(84) Pedalcyclist or other nonmotorist approaching roadway (specify): _____
(85) Pedalcyclist or other nonmotorist—unknown location (specify): _____

Object or Animal

(87) Animal in roadway
(88) Animal approaching roadway
(89) Animal—unknown location
(90) Object in roadway
(91) Object approaching roadway
(92) Object—unknown location
(98) Other critical precrash event (specify): _____
(99) Unknown

24. Attempted Avoidance Maneuver 03

(00) No driver present
(01) No avoidance actions
(02) Braking (no lockup)
(03) Braking (lockup)
(04) Braking (lockup unknown)
(05) Releasing brakes
(06) Steering left
(07) Steering right
(08) Braking and steering left
(09) Braking and steering right
(10) Accelerating
(11) Accelerating and steering left
(12) Accelerating and steering right
(98) Other action (specify): _____
(99) Unknown

25. Precrash Stability After Avoidance Maneuver 3

(0) No driver present
(1) No avoidance maneuver
(2) Tracking
(3) Skidding longitudinally—rotation less than 30 degrees
(4) Skidding laterally—clockwise rotation
(5) Skidding laterally—counterclockwise rotation
(8) Other vehicle loss-of-control (specify): _____
(9) Precrash stability unknown

26. Precrash Directional Consequences of Avoidance Maneuver (Corrective Action) 2

(0) No driver present
(1) No avoidance maneuver
(2) Vehicle stayed in travel lane where avoidance maneuver was initiated
(3) Vehicle stayed on roadway but left travel lane where avoidance maneuver was initiated
(4) Vehicle stayed on roadway, not known if left travel lane where avoidance maneuver was initiated
(5) Vehicle departed roadway
(6) Avoidance maneuver initiated off roadway
(9) Directional consequences unknown

ENVIRONMENTAL DATA

27. Relation to Junction 3
    (0) Non-junction
    (1) Interchange area

    Non-Interchange
    (2) Intersection
    (3) Intersection-related
    (4) Drive, alley access related
    (5) Other non-interchange (specify): _____
    (6) Unknown type of non-interchange
    (9) Unknown if interchange

28. Trafficway Flow 1
    (1) Not physically divided (two way traffic)
    (2) Divided trafficway - median strip without positive barrier
    (3) Divided trafficway - median strip with positive barrier
    (4) One way trafficway
    (9) Unknown

29. Number of Travel Lanes 2
    (1) One
    (2) Two
    (3) Three
    (4) Four
    (5) Five
    (6) Six
    (7) Seven or more
    (9) Unknown

30. Roadway Alignment 1
    (1) Straight
    (2) Curve right
    (3) Curve left
    (9) Unknown

31. Roadway Profile 1
    (1) Level
    (2) Uphill Grade (>2%)
    (3) Downhill Grade (>2%)
    (4) Hillcrest
    (5) Sag
    (9) Unknown

32. ~~Roadway Surface~~ Type 1
    (1) Concrete
    (2) ~~Bituminous~~ (asphalt)
    (3) ~~Brick or~~ Block
    (4) Slag, gravel or stone
    (5) Dirt
    (8) Other (specify): _____
    (9) Unknown

majority occurred on

33. Roadway Surface Condition 1
    (1) Dry
    (2) Wet
    (3) Snow and slush
    (4) Ice
    (5) Sand, dirt or oil
    (8) Other (specify): _____
    (9) Unknown

34. Traffic Control Device 1
    (0) No traffic control(s)
    (1) Trafficway traffic control signal (not RR crossing)

    Regulatory or School Zone Sign (Not RR Crossing)
    (2) Stop sign
    (3) Yield sign
    (4) School zone sign
    (5) Other sign (specify): _____
    (6) Unknown sign
    (7) Warning sign (not RR crossing)
    (8) Miscellaneous/other controls including RR controls (specify): _____
    (9) Unknown

35. Traffic Control Device Functioning 2
    (0) No traffic control
    (1) Not Functioning
    (2) Functioning
    (9) Unknown

36. Light Conditions 1
    (1) Daylight
    (2) Dark
    (3) Dark, but lighted
    (4) Dawn
    (5) Dusk
    (9) Unknown

37. Atmospheric Conditions 1
    (1) No adverse atmospheric related driving conditions
    (2) Rain
    (3) Sleet
    (4) Snow
    (5) Fog
    (6) Rain and fog
    (7) Sleet and fog
    (8) Other (e.g., smog, smoke, blowing sand or dust, etc.) (specify): _____
    (9) Unknown

[redacted] 97

82-624

'96 F250 P.U.

43Y0m

42Y01=
65"
160#

POI to FRP = 4m = 13 ft
f = 0.7

$v = \sqrt{(2)(13)(0.7)(32.2)}$
$= 24$ fps $= 16$ mph $= 26.5$ KPh

27 KPh

U.S. Department of Transportation
National Highway Traffic Safety Administration

PEDESTRIAN EXTERIOR VEHICLE FORM

NATIONAL ACCIDENT SAMPLING SYSTEM
PEDESTRIAN CRASH DATA STUDY

1. Primary Sampling Unit Number 82
2. Case Number - Stratum 6 24 P
3. Vehicle Number 0 1

VEHICLE IDENTIFICATION

VIN 2FTEF25N4TC[redacted] Model Year 96

Vehicle Make (specify): Ford Vehicle Model (specify): 250 XL / Truck

PEDESTRIAN FRONT CONTACT WORK SHEET

PEV06	Hood Material	Steel	
PEV08	Hood Length	113	cm
PEV09	Hood Width-Forward Opening	173	cm
PEV10	Hood Width-Midway	173	cm
PEV11	Hood Width-Rear Opening	173	cm
PEV14	Front Bumper Cover Material	St. Steel	
PEV15	Front Bumper Reinforcement Material	St. Steel	

VERTICAL MEASUREMENTS

PEV16	Front Bumper-Bottom Height	047	cm
PEV17	Front Bumper-Top Height	070	cm
PEV18	Forward Hood Opening	110	cm
PEV19	Front Bumper Lead	010	cm

WRAP DISTANCES

PEV20	Ground to Forward Hood Opening	113	cm
PEV21	Ground to Front/Top Transition Point	118	cm
PEV22	Ground to Rear Hood Opening	229	cm
PEV23	Ground to Base of Windshield	247	cm
PEV24	Ground to Top of Windshield	307	cm
PEV25	Ground to Head Contact	131	cm

none

facial R

HS Form 0435K (Rev. 10/95)

VEHICLE DAMAGE SKETCH

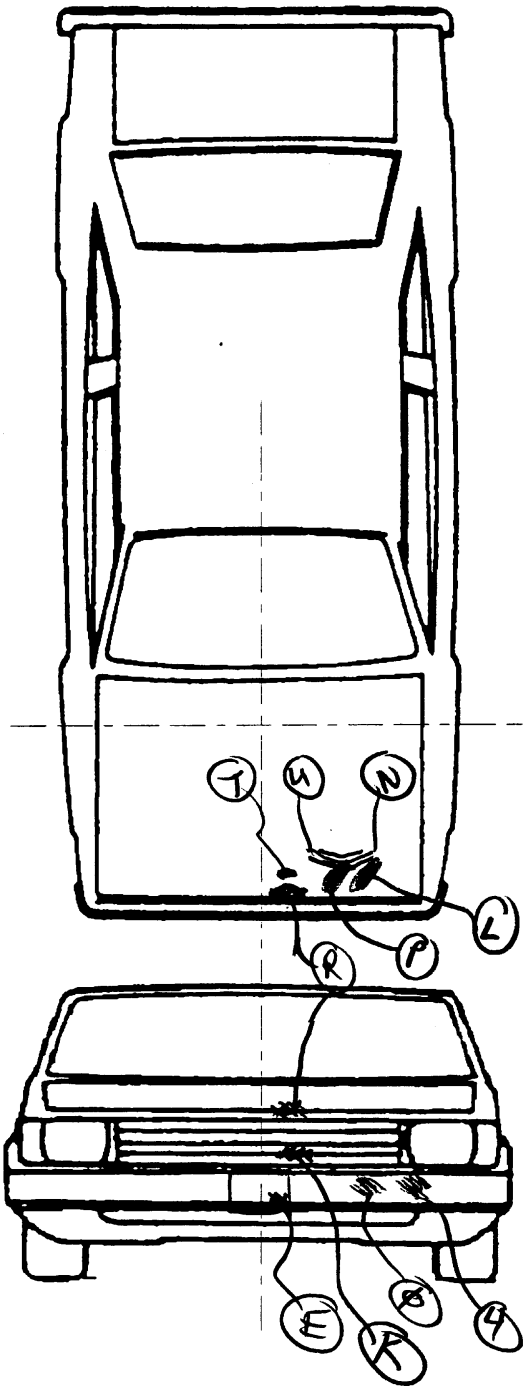

NOTES: Sketch all pedestrian contacts, include the size and depth in centimeters. Locate the pedestrian contacts from the intercept point of the centerline (lateral) and the front axles (longitudinal) in centimeters. Annotate observations which might be useful in reconstructing the accident (e.g., grass in tire bead, direction of striations, scuff on sidewalls, etc.).

Location of the origin (intercept point of the centerline and the front axles) from the ground: 193 cm

PEDESTRIAN SIDE CONTACT WORK SHEET

PEV06 Hood Material _____

PEV08 Hood Length ___ ___ ___ cm

PEV09 Hood Width-Forward Opening ___ ___ ___ cm

PEV10 Hood Width-Midway ___ ___ ___ cm

PEV11 Hood Width-Rear Opening ___ ___ ___ cm

VERTICAL MEASUREMENTS

PEV26 Ground Clearance ___ ___ ___ cm

PEV27 Side Bumper-Bottom Height ___ ___ ___ cm

PEV28 Side Bumper-Top Height ___ ___ ___ cm

PEV29 Centerline of Wheel ___ ___ ___ cm

PEV30 Top of Tire ___ ___ ___ cm

PEV31 Top of Wheel Well Opening ___ ___ ___ cm

PEV32 Bottom of A-Pillar at Windshield ___ ___ ___ cm

PEV33 Top of A-Pillar at Windshield ___ ___ ___ cm

PEV34 Top of Side View Mirror ___ ___ ___ cm

LATERAL MEASUREMENTS

PEV35 C_L to A-Pillar at Bottom of Windshield ___ ___ ___ cm

PEV36 C_L to A-Pillar at Top of Windshield ___ ___ ___ cm

PEV37 C_L to Maximum Side View Mirror Protrusion ___ ___ ___ cm

WRAP DISTANCES

PEV38 Ground to Side/Top Transition ___ ___ ___ cm

PEV39 Ground to Hood Edge ___ ___ ___ cm

PEV40 Ground to Centerline of Hood (ORIGIN) ___ ___ ___ cm

PEV41 Ground to Head Contact ___ ___ ___ cm

ORIGINAL SPECIFICATIONS

Wheelbase	133	inches	x 2.54	=	338	cm
Overall Length	213.3	inches	x 2.54	=	542	cm
Maximum Width	79	inches	x 2.54	=	201	cm
Curb Weight 4320 SW 100 - V8 100 4520	4,520	pounds	x .4536	=	2050	kg
Average Track		inches	x 2.54	=		cm
Front Overhang	33.5	inches	x 2.54	=	85	cm
Rear Overhang 96 Gas Tank Trailer		inches	x 2.54	=		cm
Undeformed End Width		inches	x 2.54	=		cm
Engine Size: cyl./displ.		cc	x .001	=		L
		CID	x .0164	=		L

INJURY SOURCE

FRONT
700 Front bumper
701 Front lower valance/spoiler
702 Front grille
703 Hood edge and/or trim
704 Hood ornament (fixed)
705 Hood ornament (spring loaded)
706 Headlight
707 Retractable headlight door (Open/Closed)
708 Turn signal/parking lights
718 Other front or add on object (specify):_____
719 Unknown front object

Left Side Components
720 Front fender side surface
721 Front antenna
722 A1 pillar
723 A2 pillar
724 B pillar
725 C pillar
726 D pillar
728 Other pillar (specify): _____
729 Left side roof rail
730 Left side door surface
731 Left side door handle
732 Left side mirror fixed housing
733 Left side folding mirror
734 Left side glazing forward of B pillar
735 Left side glazing rearward of B pillar
736 Left side back fender or quarter panel
737 Rear antenna
738 Other left side object (specify): _____
739 Unknown left side component

Right Side Components
740 Front fender side surface
741 Front antenna
742 A1 pillar
743 A2 pillar
744 B pillar
745 C pillar
746 D pillar
748 Other pillar (specify):_____
749 Right side roof rail
750 Right side door surface
751 Right side door handle
752 Right side mirror fixed housing
753 Right side folding mirror
754 Right side glazing forward of B pillar
755 Right side glazing rearward of B pillar
756 Rear antenna
757 Rear fender or quarter panel
758 Other right side object (specify): _____
759 Unknown right side component

Back Components
760 Rear (back) bumper
761 Tailgate
762 Hatchback, vertical surface
768 Other back component (specify): _____
769 Unknown back component

Top Components
770 Hood surface
771 Hood surface reinforced by under hood component
772 Front fender top surface
773 Cowl area
774 Wiper blade & mountings
775 Windshield glazing
776 Front header
777 Roof surface
778 Backlight glazing
779 Rear header
780 Hatchback
781 Rear trunk lid
788 Other top component (specify): _____
789 Unknown top component

Wheels / tires
790 Left front wheel / tire
791 Right front wheel / tire
792 Left rear wheel / tire
793 Right rear wheel /tire
798 Other wheel / tire (specify): _____
799 Unknown wheel / tire

Undercarriage components
800 Front cross member
801 Steering assembly/Front suspension
802 Oil pan
803 Exhaust system pipe
804 Transmission
805 Drive shaft
806 Catalytic converter
807 Muffler
808 Floor pan
809 Fuel tank
810 Rear suspension
818 Other undercarriage component (specify): _____
819 Unknown undercarriage component

Accessories
820 Air scoop, deflector
821 Cellular or CB radio antenna
822 Emergency lights or bar
823 Fog lights
824 Luggage, ski, or bike rack
825 Cargo (specify):_____
826 Spare tire
827 Spotlight
828 Other accessory (specify):_____

Other Object or Vehicle in Environment
947 Ground
948 Other object (specify):_____
949 Unknown object in environment
959 Unknown object on contacting vehicle
997 Noncontact injury source
999 Unknown injury source

VEHICLE DAMAGE SKETCH

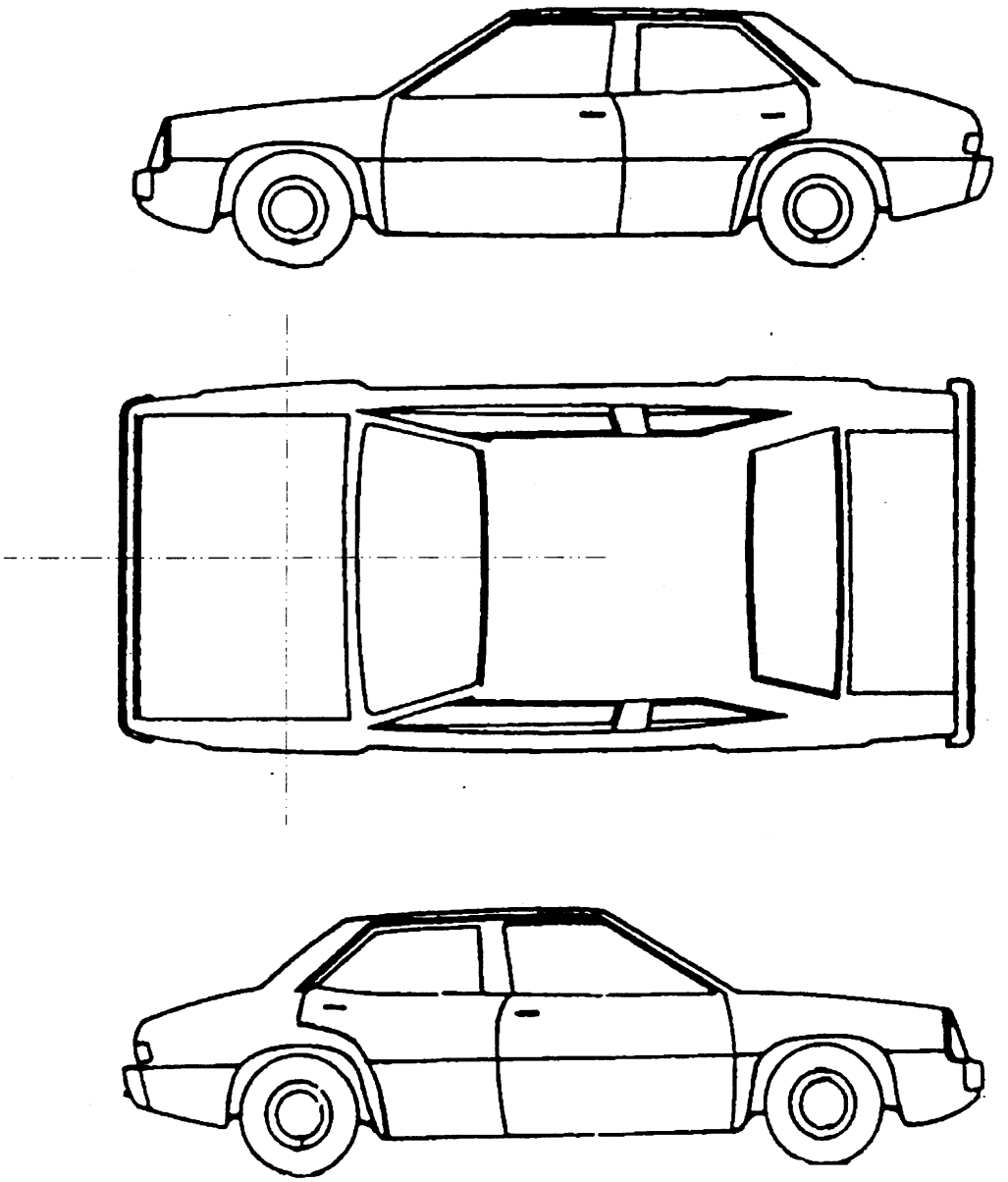

NOTES: Sketch all pedestrian contacts, include the size and depth in centimeters. Locate the pedestrian contacts from the intercept point of the centerline (lateral) and the front axles (longitudinal) in centimeters. Annotate observations which might be useful in reconstructing the accident (e.g., grass in tire bead, direction of striations, scuff on sidewalls, etc.).

Location of the origin (intercept point of the centerline and the front axles) from the ground: ___ ___ ___ cm

POINTS OF PEDESTRIAN CONTACT

PEDESTRIAN CONTACT WORKSHEET

CONTACT ID LABEL	COMPONENT CONTACTED	LONGITUDINAL LOCATION (X)	LATERAL LOCATION (Y)	CRUSH IN CENTIMETERS	SUSPECTED BODY REGION	SUPPORTING PHYSICAL EVIDENCE	CONFIDENCE LEVEL OF CONTACT POINT (Circle)	SEQUENCE #
E	License Plate	146	-15	1	Leg	Bent	(1) 2 3 9	1
4	Bumper	123	-31	0	Legs	Upper Body Rotated Forward	(1) 2 3 9	9
Q	Bumper	123	-49	0	Legs	Legs Flap around	(1) 2 3 9	8
K	Grill	111	-12	0	Hip Area	smudge smear	(1) 2 3 9	2
R	Hood Edge	78	-12	1	(1) Chest	Pushed inward	1 2 3 9	3
T	Hood	73	-13	1	" "	Dented	1 2 3 9	4
U	Hood	60	-28	0	Back Pack?	Curved narrow	1 2 3 9	5
N	"	62	-48	0	Glasses on Face	smudge streaks	1 2 3 9	5
P	Hood	68	-39	0	Arm? Face.	Greasy wide smudge	1 2 3 9	6
L	Hood	68	-50	0	Arm? Face.	Greasy wide smudge	1 2 3 9	7
							1 2 3 9	
							1 2 3 9	
							1 2 3 9	
							1 2 3 9	
							1 2 3 9	
							1 2 3 9	
							1 2 3 9	
							1 2 3 9	
							1 2 3 9	
							1 2 3 9	
							1 2 3 9	
							1 2 3 9	
							1 2 3 9	
							1 2 3 9	
							1 2 3 9	

POINTS OF PEDESTRIAN CONTACT

CHRONOLOGICAL ORDER OF CONTACTS

CONTACT #	COMPONENT CONTACTED CODE	LONGITUDINAL LOCATION (X)	LATERAL LOCATION (Y)	CRUSH IN CENTIMETERS	SUSPECTED BODY REGION	SUPPORTING PHYSICAL EVIDENCE	CONFIDENCE LEVEL OF CONTACT POINT (Circle)
1 R	703	78	-12	1-2	L. arm	dent	(1) 2 3 9
2 R	703	78	-12	1-2	L. Ribs	dent	(1) 2 3 9
3							1 2 3 9
4							1 2 3 9
5							1 2 3 9
6							1 2 3 9
7							1 2 3 9
8							1 2 3 9
9							1 2 3 9
10							1 2 3 9
11							1 2 3 9
12							1 2 3 9
13							1 2 3 9
14							1 2 3 9
15							1 2 3 9
16							1 2 3 9
17							1 2 3 9
18							1 2 3 9
19							1 2 3 9
20							1 2 3 9
21							1 2 3 9
22							1 2 3 9
23							1 2 3 9
24							1 2 3 9
25							1 2 3 9

VEHICLE DIMENSIONS

4. Original Wheelbase 338
   ____ Code to the nearest centimeter
   (999) Unknown

   133 . __ inches X 2.54 = ___ centimeters

5. Original Average Track Width 999
   ____ Code to the nearest centimeter
   (185) 185 centimeters or more
   (999) Unknown

   ___ . __ inches X 2.54 = ___ centimeters

6. Hood Material 2
   (1) Plastic
   (2) Fiberglass
   (3) Steel
   (4) Aluminum
   (5) Stainless Steel
   (8) Other (specify):_____
   (9) Unknown

7. Hood Original Equipment Manufacturer (OEM) 1
   (1) OEM factory installed hood
   (2) OEM replacement
   (3) Non-OEM replacement
   (9) Unknown

8. Hood Length 113
   ____ Code to the nearest centimeter
   (180) 180 centimeters or more
   (999) Unknown

   ___ . __ inches X 2.54 = ___ centimeter

9. Hood Width Forward Opening 173
   ____ Code to the nearest centimeter
   (210) 210 centimeters or more
   (999) Unknown

   ___ . __ inches X 2.54 = ___ centimeters

10. Hood Width Midway 173
    ____ Code to the nearest centimeter
    (210) 210 centimeters or more
    (999) Unknown

    ___ . __ inches X 2.54 = ___ centimeters

11. Hood Width Rear Opening 173
    _____ Code to the nearest centimeter
    (210) 210 centimeters or more
    (999) Unknown

    ___ . __ inches X 2.54 = ___ centimeters

12. Hood/Fender Vertical/Lateral Crush From Pedestrian 2
    (0) Not damaged
    (1) Surface scratching only, no residual crush
    (2) Minor crush (1-3 centimeters)
    (3) Moderate crush (4-7 centimeters)
    (4) Severe crush (>7 centimeters)
    (8) Damage present, unknown if damage is from pedestrian impact
    (9) Unknown

13. Windshield Contact Damage From Pedestrian Contact 0
    (0) Not contacted by pedestrian
    (1) Contacted by pedestrian - not damaged
    (2) Contacted by pedestrian - damaged
    (3) Unknown if contacted by pedestrian - not damaged
    (4) Unknown if contacted by pedestrian - damaged
    (9) Unknown if contacted by pedestrian - unknown if damaged

FRONT CONTACT DAMAGE

Front Vertical Measurements

14. Front Bumper Cover Material 4
    (0) No front contact
    (1) Plastic
    (2) Fiberglass
    (3) Rubber
    (4) Other (specify): St. Steel
    (9) Unknown

15. Front Bumper Reinforcement Material 3
    (0) No front contact
    (1) Steel
    (2) Aluminum
    (3) Stainless Steel
    (4) Other (specify):_____
    (9) Unknown

16. Front Bumper-Bottom Height 047
    ____ Code to the nearest centimeter
    (000) No front contact
    (150) 150 centimeters or more
    (999) Unknown

    ___ . __ inches X 2.54 = ___ centimeters

17. Front Bumper-Top Height 076
____ Code to the nearest centimeter
(000) No front contact
(150) 150 centimeters or more
(999) Unknown

___ ___ ___ . ___ inches X 2.54 = ___ ___ ___ centimeters

18. Forward Hood Opening 110
____ Code to the nearest centimeter
(000) No front contact
(200) 200 centimeters or more
(999) Unknown

___ ___ ___ . ___ inches X 2.54 = ___ ___ ___ centimeters

19. Front Bumper Lead 10
(00) No front contact
____ Code to the nearest centimeter
(30) 30 centimeters or more
(99) Unknown

___ ___ ___ . ___ inches X 2.54 = ___ ___ ___ centimeters

Front Wrap Distance Measurements

20. Ground to Forward Hood Opening 113
____ Code to the nearest centimeter
(000) No front contact
(200) 200 centimeters or more
(999) Unknown

___ ___ ___ . ___ inches X 2.54 = ___ ___ ___ centimeters

21. Ground to Front/Top Transition Point 118
____ Code to the nearest centimeter
(000) No front contact
(180) 180 centimeters or more
(999) Unknown

___ ___ ___ . ___ inches X 2.54 = ___ ___ ___ centimeters

22. Ground to Rear Hood Opening 229
____ Code to the nearest centimeter
(000) No front contact
(400) 400 centimeters or more
(999) Unknown

___ ___ ___ . ___ inches X 2.54 = ___ ___ ___ centimeters

23. Ground to Base of Windshield 247
____ Code to the nearest centimeter
(000) No front contact
(400) 400 centimeters or more
(999) Unknown

___ ___ ___ . ___ inches X 2.54 = ___ ___ ___ centimeters

24. Ground to Top of Windshield 307
____ Code to the nearest centimeter
(000) No front contact
(500) 500 centimeters or more
(999) Unknown

___ ___ ___ . ___ inches X 2.54 = ___ ___ ___ centimeters

25. Ground To Head Contact ~~131~~ 998
____ Code to the nearest centimeter
(000) No front contact
(400) 400 centimeters or more
(998) No head contact
(999) Unknown

please check? focal smear?

___ ___ ___ . ___ inches X 2.54 = ___ ___ ___ centimeters

SIDE CONTACT DAMAGE

Side Vertical Measurements

26. Ground Clearance 000
____ Code to the nearest centimeter
(000) No side contact
(150) 150 centimeters or more
(999) Unknown

___ ___ ___ . ___ inches X 2.54 = ___ ___ ___ centimeters

27. Side Bumper-Bottom Height 000
____ Code to the nearest centimeter
(000) No side contact
(150) 150 centimeters or more
(999) Unknown

___ ___ ___ . ___ inches X 2.54 = ___ ___ ___ centimeters

28. Side Bumper-Top Height 000
____ Code to the nearest centimeter
(000) No side contact
(150) 150 centimeters or more
(999) Unknown

___ ___ ___ . ___ inches X 2.54 = ___ ___ ___ centimeters

29. Centerline of Wheel
_____ Code to the nearest centimeter
(000) No side contact
(150) 150 centimeters or more
(999) Unknown

___ ___ ___ . ___ inches X 2.54 = ___ ___ ___ centimeters

30. Top of Tire
_____ Code to the nearest centimeter
(000) No side contact
(200) 200 centimeters or more
(999) Unknown

___ ___ ___ . ___ inches X 2.54 = ___ ___ ___ centimeters

31. Top of Wheel Well Opening
_____ Code to the nearest centimeter
(000) No side contact
(250) 250 centimeters or more
(999) Unknown

___ ___ ___ . ___ inches X 2.54 = ___ ___ ___ centimeters

32. Bottom of A-Pillar at Windshield
_____ Code to the nearest centimeter
(000) No side contact
(250) 250 centimeters or more
(999) Unknown

___ ___ ___ . ___ inches X 2.54 = ___ ___ ___ centimeters

33. Top of A-Pillar at Windshield
_____ Code to the nearest centimeter
(000) No side contact
(300) 300 centimeters or more
(999) Unknown

___ ___ ___ . ___ inches X 2.54 = ___ ___ ___ centimeters

34. Top of Side View Mirror
_____ Code to the nearest centimeter
(000) No side contact
(300) 300 centimeters or more
(999) Unknown

___ ___ ___ . ___ inches X 2.54 = ___ ___ ___ centimeters

Side Lateral Measurements

35. Centerline to A-Pillar at Bottom of Windshield
(000) No side contact
_____ Code to the nearest centimeter
(250) 250 centimeters or more
(999) Unknown

___ ___ ___ . ___ inches X 2.54 = ___ ___ ___ centimeters

36. Centerline to A-Pillar at Top of Windshield
_____ Code to the nearest centimeter
(000) No side contact
(250) 250 centimeters or more
(999) Unknown

___ ___ ___ . ___ inches X 2.54 = ___ ___ ___ centimeter

37. Centerline to Maximum Side View Mirror Protrusion
_____ Code to the nearest centimeter
(000) No side contact
(300) 300 centimeters or more
(999) Unknown

___ ___ ___ . ___ inches X 2.54 = ___ ___ ___ centimeter

Side Wrap Distance Measurements

38. Ground to Side/Top Transition
_____ Code to the nearest centimeter
(000) No side contact
(400) 400 centimeters or more
(999) Unknown

___ ___ ___ . ___ inches X 2.54 = ___ ___ ___ centimeters

39. Ground to Hood Edge
_____ Code to the nearest centimeter
(000) No side contact
(500) 500 centimeters or more
(999) Unknown

___ ___ ___ . ___ inches X 2.54 = ___ ___ ___ centimeters

40. Ground to Centerline of Hood

_____ Code to the nearest centimeter

(000) No side contact
(700) 700 centimeters or more
(999) Unknown

___ ___ ___ . ___ inches X 2.54 = ___ ___ ___ centimeters

41. Ground to Head Contact

_____ Code to the nearest centimeter

(000) No side contact
(800) 800 centimeters or more
(998) No head contact
(999) Unknown

___ ___ ___ . ___ inches X 2.54 = ___ ___ ___ centimeters

National Accident Sampling System-Crashworthiness Data System: Field Measurement form

VEHICLE DAMAGE SKETCH

VIN 2FTEF25N4TC[redacted]

Cargo = Tool 100lb

Year 96

Make Ford 25

Model 250 XL

Hood Material Steel

Bumper Cover Type Steel

Bumper Reinforcement Material St Steel

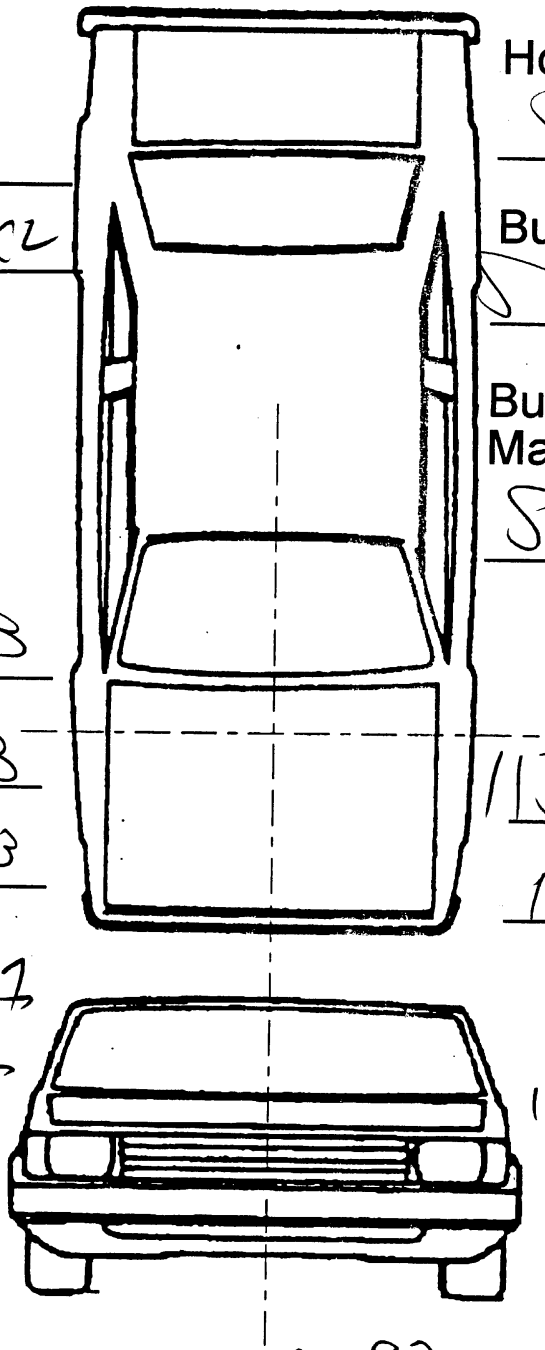

Hood Widths

Rear Opening 173

Midway 173

Front Opening 173

113 Hood Length

10 Bumper lead

Wraps

Top Windshield 200+27

Bottom Windshield 140+187

Rear Hood 140+89

Transition 118

Front Hood 113

Vertical Heights

110 Forward Hood Opening

70 Bumper Top

48 Bumper Bottom

Location of Origin (Intercept) 140+53

Head Wrap Measurement 998

Face Contact Impact

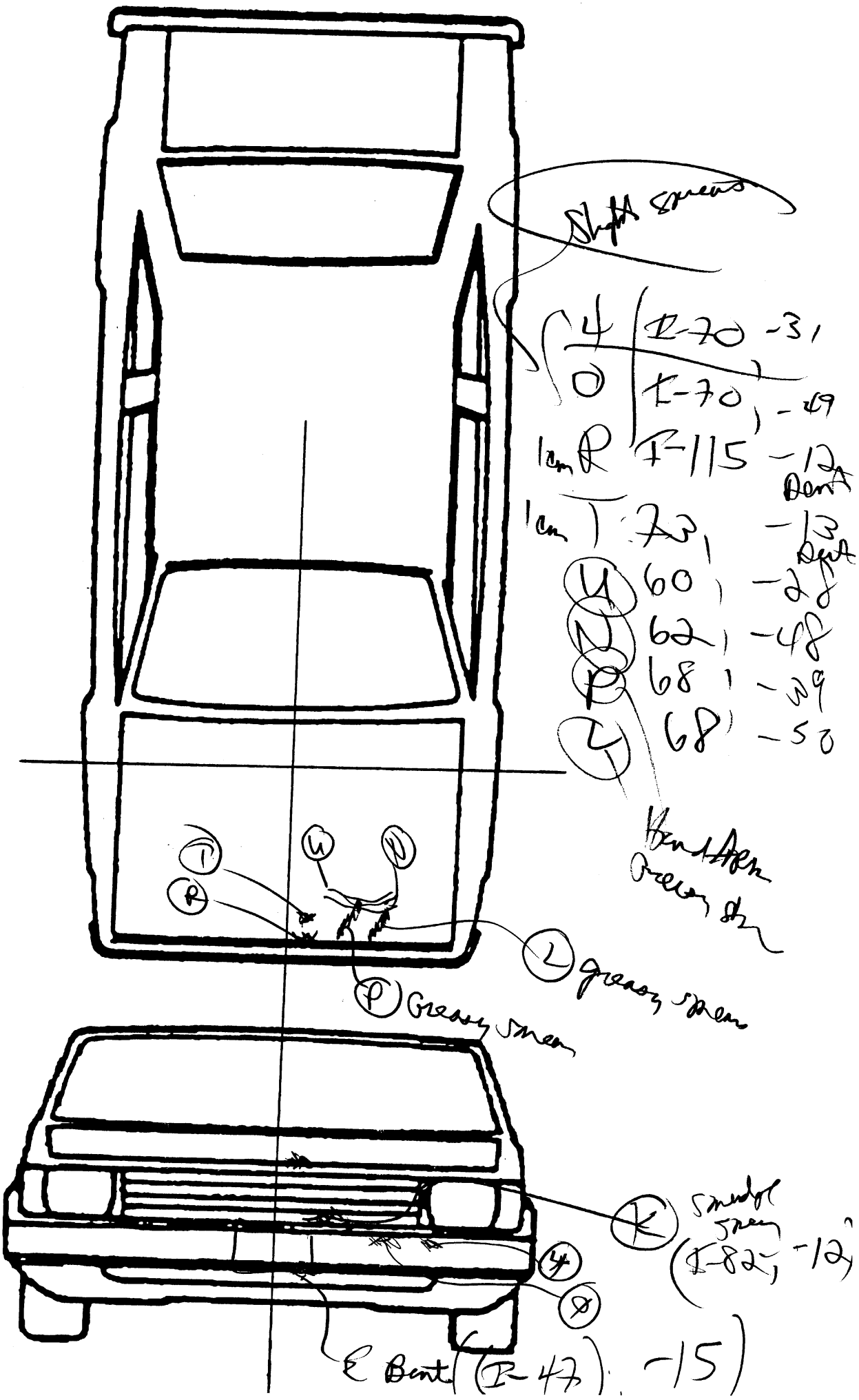
Shaft screws
4 I-70 -31
O I-70 -49
1cm R I-115 -12 Dent
1cm T 73 -13 Dent
U 60 -28
N 62 -48
P 68 -39
L 68 -50
Hand Arm Greasy Stn
T
R
U
N
L greasy smear
P Greasy smear
K smudge smear (I-82, -12)
4
O
E Bent (I-47), -15)

Final

BEST AVAILABLE

82624P00000011[redacted] [redacted] [redacted] [redacted]

[illegible] 01

82624[illegible] [redacted]

[illegible]

10100[illegible]

[illegible]

[illegible]

[illegible]

[illegible]

[illegible]

[illegible]

[illegible]

[illegible]

[redacted]

[illegible]

[illegible]				
[illegible]				
[illegible]				
[illegible]				
[illegible]				
[illegible]				
[illegible]				
[illegible]				