ENTIRE PAGE CONFIDENTIAL BUSINESS INFORMATION

Lexus ES 350
All Weather Floor Mat

September 13, 2007

TOY-TQ001-00009898

ENTIRE PAGE CONFIDENTIAL BUSINESS INFORMATION

Agenda

- Overview
- NHTSA Concerns
- Points of Interest
- Toyota Action Plan

ENTIRE PAGE CONFIDENTIAL BUSINESS INFORMATION

Overview

NHTSA Investigation

- PE opened March 29, upgraded to EA August 8
- EA Opening Resume
  - Unsecured floor mats observed in majority of complaints
  - 17 complaints
  - 5 vehicle crashes
    - 2 Injury Incidents, 1 reported as significant
- Upgraded from PE to EA so NHTSA could:
  - Further investigate this issue
  - Assess actions taken by Toyota

TOY-TQ001-00009900

ENTIRE PAGE CONFIDENTIAL BUSINESS INFORMATION

Overview

Toyota Response

- Lexus All Weather Floor Mat ONP
  - **All ES 350 owners included**
  - **Mailing conducted April 24 – May 11, 2007**
  - **96,277 registered owners in the United States and territories**
  - **21,500 Lexus AWM sold (PIO, DIO) as of March 2007**
    (Approximately 38,400 Lexus AWM sold (PIO, DIO, including dealer inventory) as of September 1, 2007)
  - **Notice sent to Lexus Dealerships at time of owner mailing**
- Enlargement of warning on floor mat
- Revised retail packaging
  - **Hanging tag with Installation Caution, to be removed only by consumer**
  - **Installation Caution on header card**

TOY-TQ001-00009901

ENTIRE PAGE CONFIDENTIAL BUSINESS INFORMATION

NHTSA Concerns (EA Resume)

"ODI has observed that an unsecured Lexus accessory all weather floor mat can trap the throttle pedal in an open position resulting in significant unwanted acceleration."

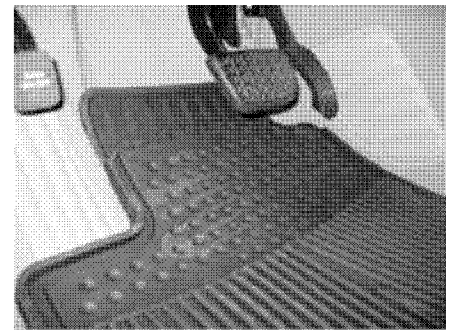

TOY-TQ001-00009902

ENTIRE PAGE CONFIDENTIAL BUSINESS INFORMATION

Points of Interest

- What is the prevalent failure mode?
  - Double stacked AWM
  - AWM: Pedal trapped in ridge

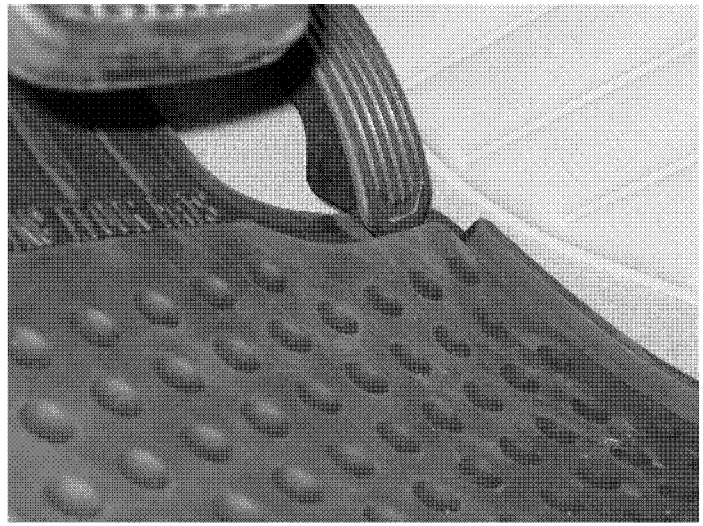

Note: AWM cannot interfere with accelerator pedal if properly secured with the retention clips

TOY-TQ001-00009903

ENTIRE PAGE CONFIDENTIAL BUSINESS INFORMATION

Points of Interest

- Any floor mat can interfere with the accelerator pedal in any vehicle
  - Transport Canada issued **a general** advisory in March 2007 (click here)
    - If you have installed aftermarket floor mats in your vehicle, make certain they cannot move while driving.
    - If you are going to install rubber mats in the winter months, when doing so, be sure that you remove the originally equipped factory floor mats.
    - Use only one set of mats and make certain that the mats do not interfere with the gas or brake pedal before driving the vehicle.
    - If the vehicle is equipped with a floor mat retaining pin or clip, make certain that the mat is installed as per the vehicle manufacturer's instructions.

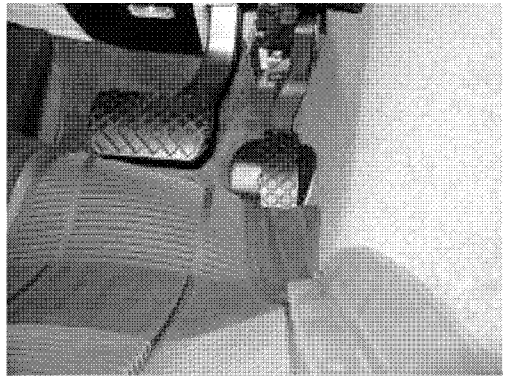

TOY-TQ001-00009904

ENTIRE PAGE CONFIDENTIAL BUSINESS INFORMATION

Effectiveness of Owner Notification

- Mailing conducted April 24 – May 11
- At the time of the August 2007 upgrade, of the 17 VOQ's, none reported incident dates later than May 2007
- This week, NHTSA informed Toyota of 4 additional VOQ's
  - 3 reported incident dates after July 3, 2007
  - 1 reported an incident date in December 2006
  - Currently under evaluation

TOY-TQ001-00009905

ENTIRE PAGE CONFIDENTIAL BUSINESS INFORMATION

Other Vehicles – Prius

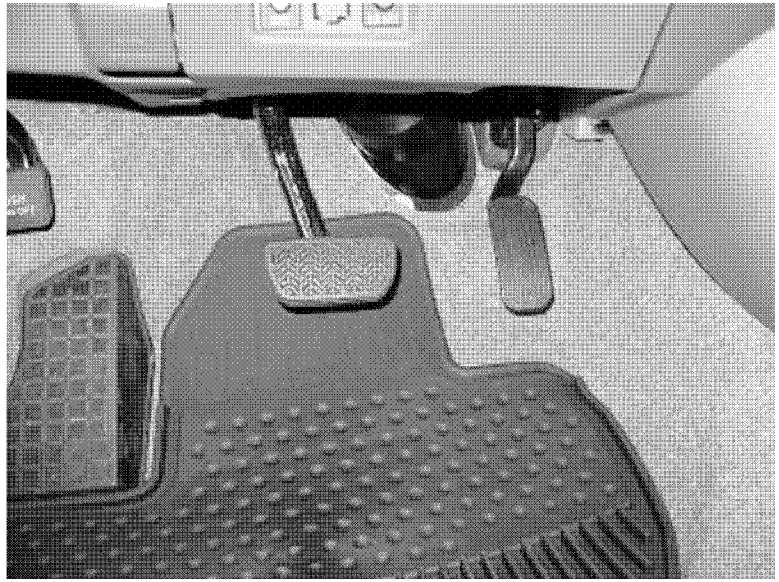

Prius

- **Leading edge of mat interferes with steering column cover**
- **Footrest obstructs forward movement of AWM**
- **Cannot experience same condition as ES350**

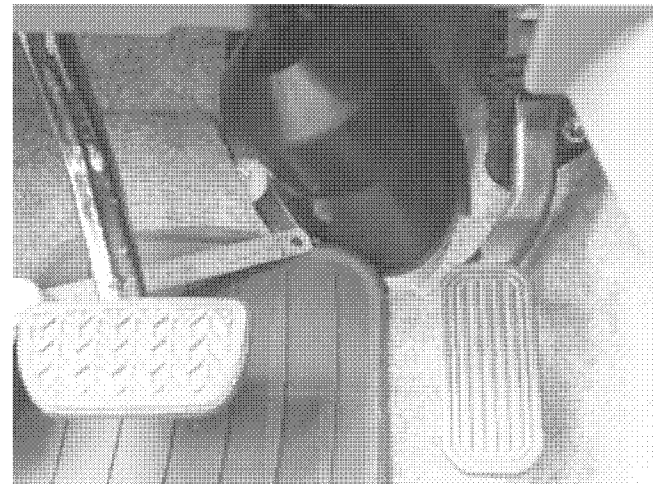

TOY-TQ001-00009906

ENTIRE PAGE CONFIDENTIAL BUSINESS INFORMATION

Other Vehicles – Avalon

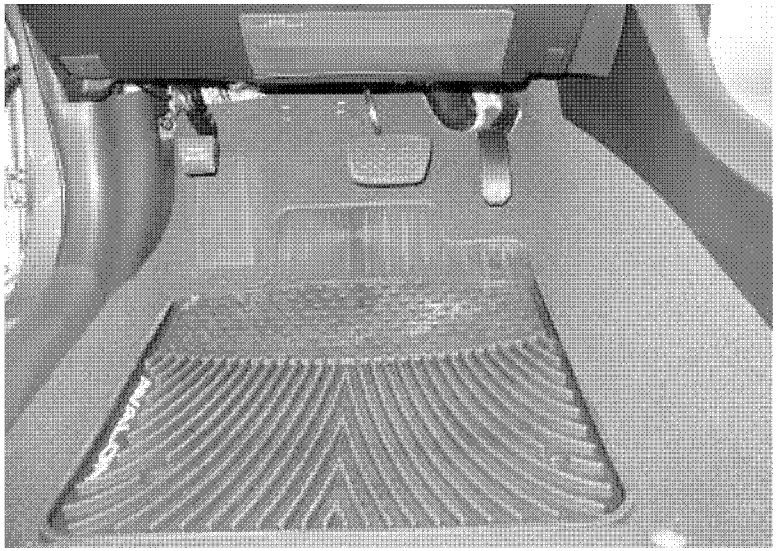

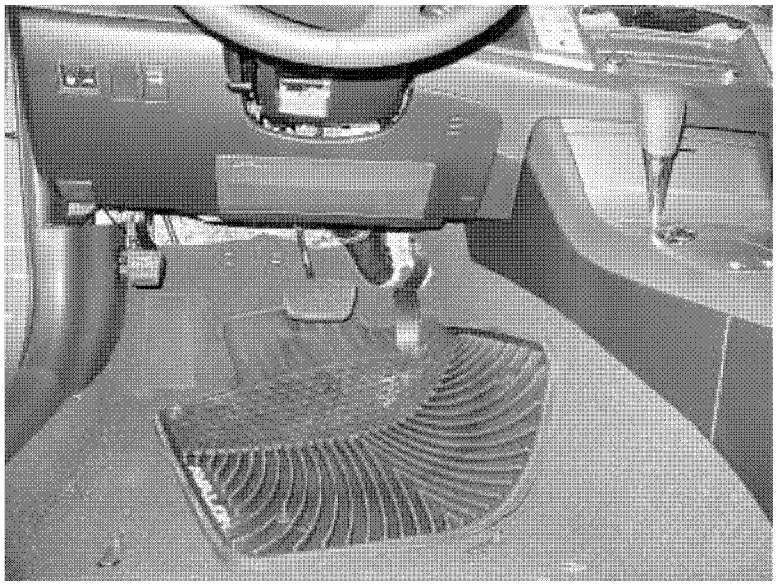

Avalon

- **Different ridge on AWM**
- **Footwell impedes forward movement of AWM**
- **Tunnel design reduces the possibility of occurrence**

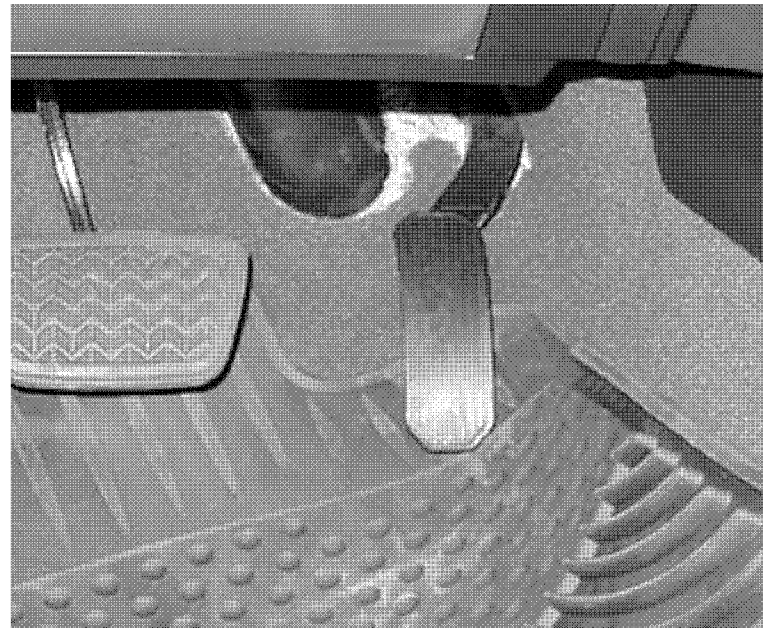

TOY-TQ001-00009907

ENTIRE PAGE CONFIDENTIAL BUSINESS INFORMATION

Other Vehicles – IS250/350

IS250/350

- **Footrest obstructs forward movement of AWM**
- **Cannot experience same condition as ES350**

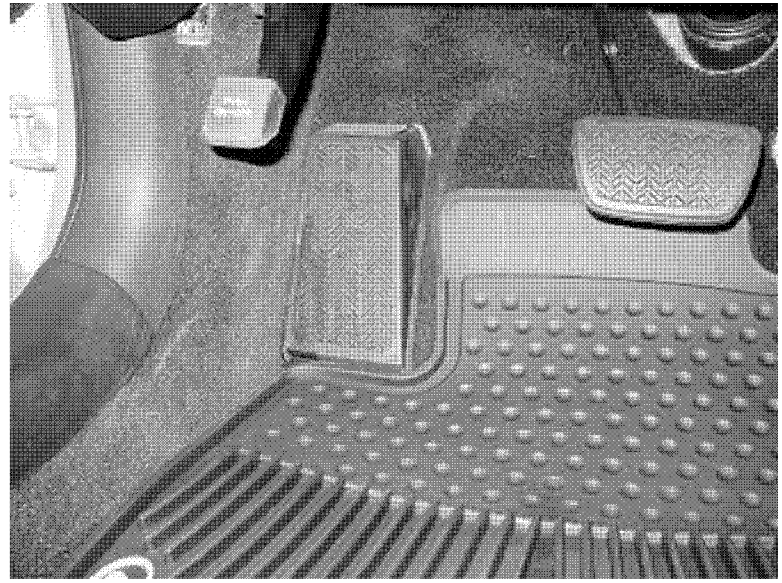

TOY-TQ001-00009908

ENTIRE PAGE CONFIDENTIAL BUSINESS INFORMATION

Other Manufacturer Vehicles

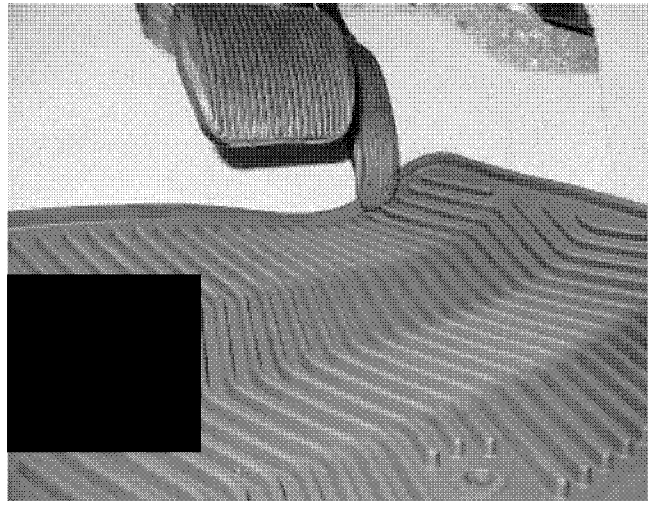

- Same AWM supplier
- OE Accessory
- Related VOQ's in NHTSA Database

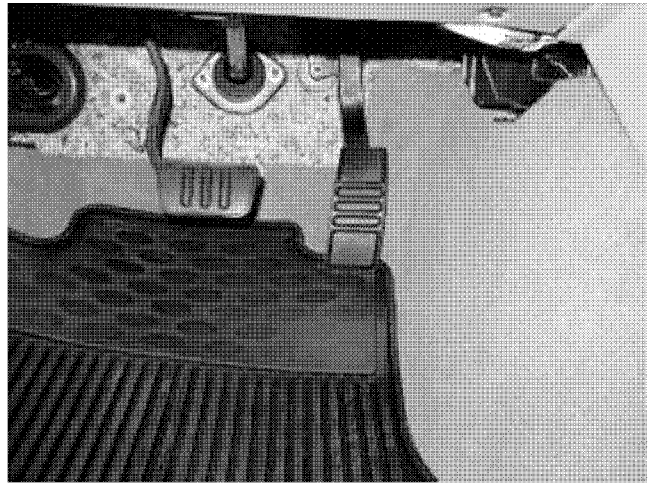

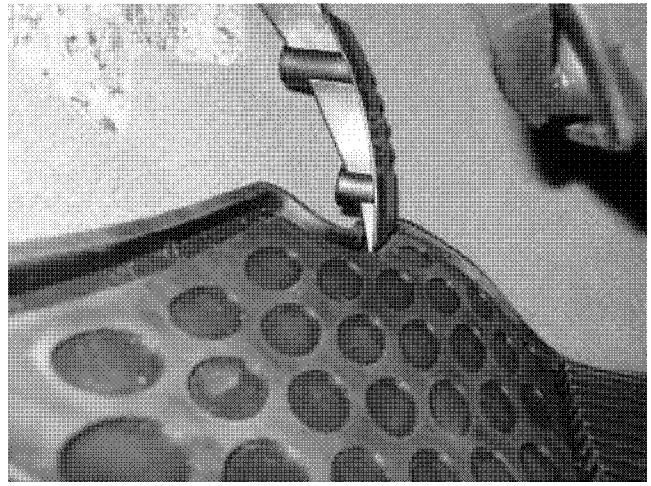

TOY-TQ001-00009909

ENTIRE PAGE CONFIDENTIAL BUSINESS INFORMATION

Toyota Action Plan

- Discussion

TOY-TQ001-00009910

Slide Notes

Slide 4:

Approximately 38,400 Lexus AWM sold (PIO, DIO, including dealer inventory) as of September 1, 2007