NEWS FROM TOYOTA
PUBLIC AFFAIRS, TOYOTA MOTOR SALES, U.S.A., INC.

FOR IMMEDIATE RELEASE
TMS-050-09

Toyota/Lexus Consumer Safety Advisory Potential Floor Mat Interference with Accelerator Pedal

September 29, 2009

Toyota Motor Sales, USA, Inc. takes public safety very seriously. It believes its vehicles to be among the safest on the road today.

Recent events have prompted Toyota to take a closer look at the potential for an accelerator pedal to get stuck in the full open position due to an unsecured or incompatible driver's floor mat. A stuck open accelerator pedal may result in very high vehicle speeds and make it difficult to stop the vehicle, which could cause a crash, serious injury or death.

Toyota considers this a critical matter and will soon launch a safety campaign on specific Toyota and Lexus vehicles. Throughout the process of developing the details of the action plan, it will advise the National Highway Traffic Safety Administration (NHTSA).

Until Toyota develops a remedy, it is asking owners of specific Toyota and Lexus models to take out any removable driver's floor mat and NOT replace it with any other floor mat. The following models are affected:

- 2007 – 2010 Camry
- 2005 – 2010 Avalon
- 2004 – 2009 Prius
- 2005 – 2010 Tacoma
- 2007 – 2010 Tundra
- 2007 – 2010 ES350
- 2006 – 2010 IS250 and IS350

Should the vehicle continue to accelerate rapidly after releasing the accelerator pedal, this could be an indication of floor mat interference. If this occurs, Toyota recommends the driver take the following actions:

First, if it is possible and safe to do so, pull back the floor mat and dislodge it from the accelerator pedal; then pull over and stop the vehicle.

If the floor mat cannot be dislodged, then firmly and steadily step on the brake pedal with both feet. Do NOT pump the brake pedal repeatedly as this will increase the effort required to slow the vehicle.

Shift the transmission gear selector to the Neutral (N) position and use the brakes to make a controlled stop at the side of the road and turn off the engine.

If unable to put the vehicle in Neutral, turn the engine OFF, or to ACC. This will not cause loss of steering or braking control, but the power assist to these systems will be lost.

-If the vehicle is equipped with an Engine Start/Stop button, firmly and steadily push the button for at least three seconds to turn off the engine. Do NOT tap the Engine Start/Stop button.

-If the vehicle is equipped with a conventional key-ignition, turn the ignition key to the ACC position to turn off the engine. Do NOT remove the key from the ignition as this will lock the steering wheel.

In the event owners choose not to remove their floor mat, Toyota strongly recommends that they ensure that the correct floor mat is being used, that it is properly installed and secured, that it is not flipped over with bottom-side up, and that one floor mat is not stacked over another. Information on proper floor mat installation can be found on http://www.toyota.com and http://www.lexus.com.

Owners with questions or concerns, are asked to please contact the Toyota Customer Experience Center (1 800 331-4331) or Lexus Customer Assistance Center (1 800 255-3987), or consult the information posted at http://www.toyota.com and http://www.lexus.com.

EXAMPLE OF PROPERLY INSTALLED FLOOR MAT

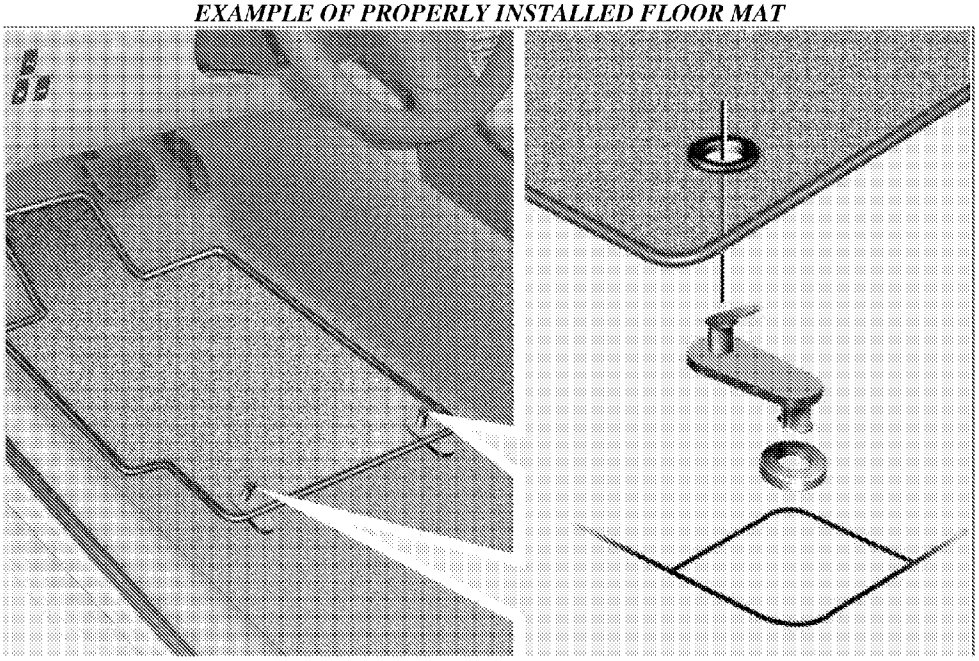

# # #

MEDIA CONTACTS: Toyota Environmental, Safety and Quality Communications
Brian R. Lyons (310) 468-2552
John Hanson (310) 468-4718

Media Web site: http://www.toyotanewsroom.com
Public Web site: http://www.toyota.com