REVISION HISTORY				
ZONE	REV	DESCRIPTION	DATE	BY
	A	ADDED SLOT	4/18/2012	DW
	B	REMOVED SLOT; COMPLETE REDESIGNED	12/12/2012	DW
	C	DRAWING NUMBER WAS 2921-202	12/12/2013	DW

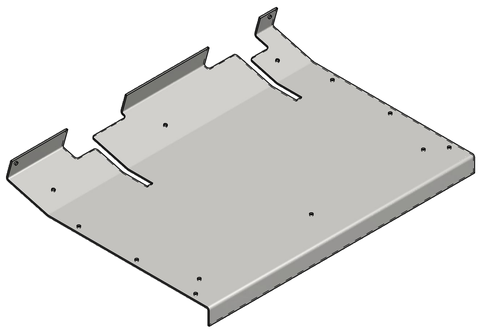

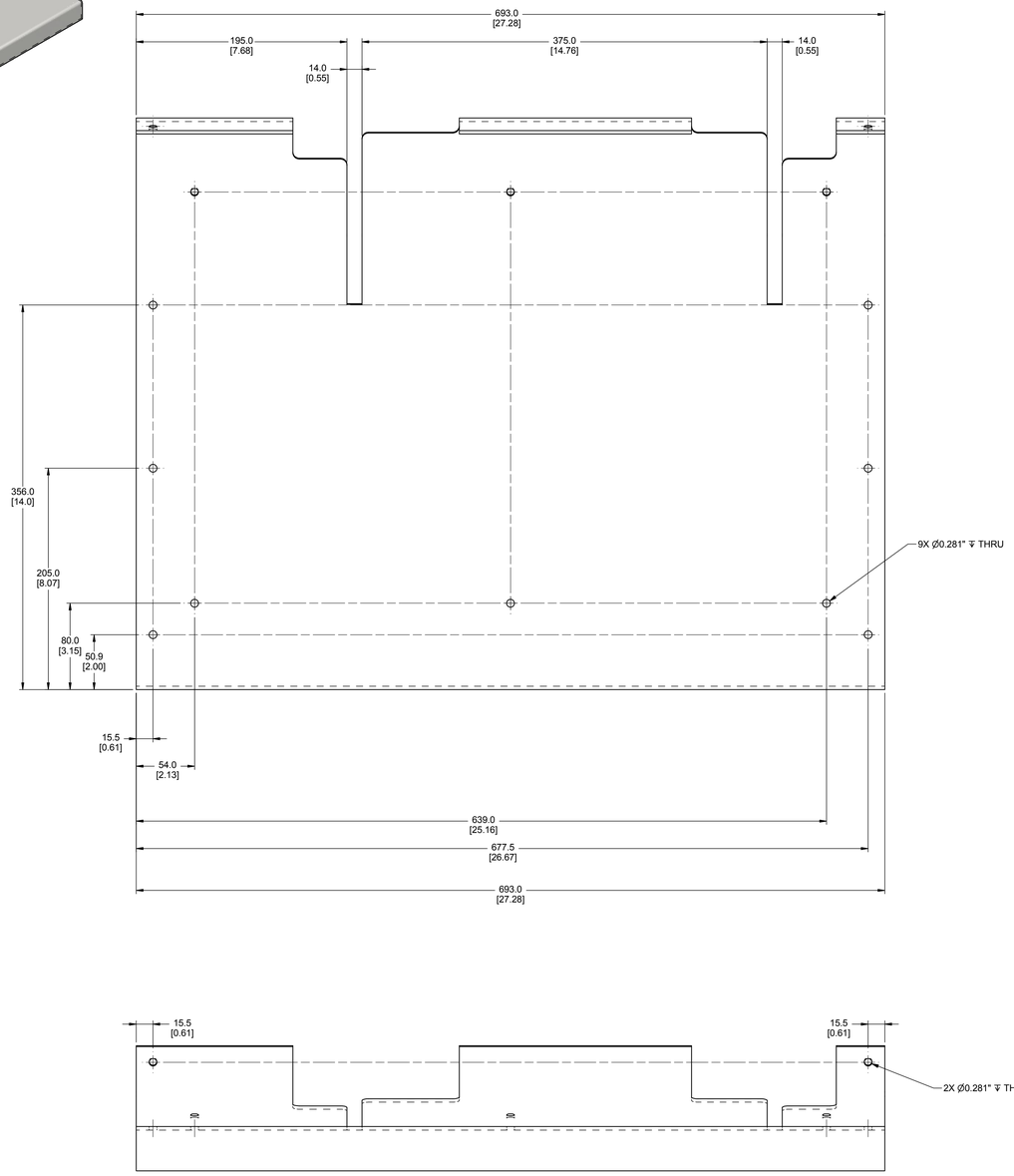

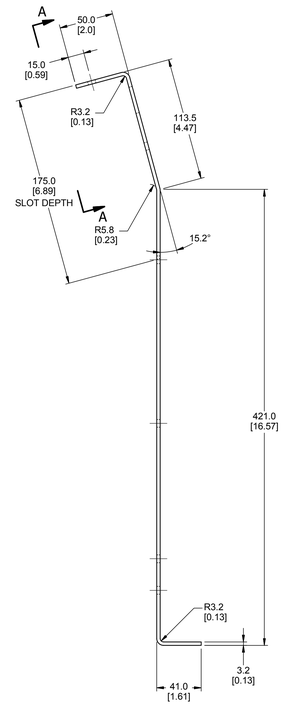

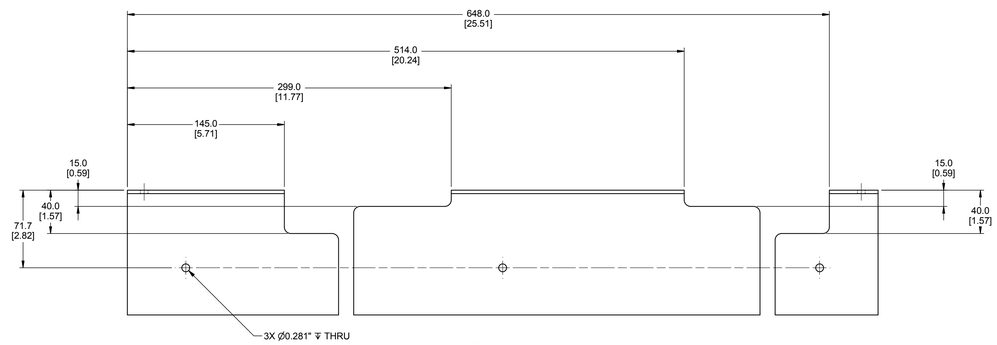

SECTION A–A
SCALE 1 / 2

MATERIAL: PL 3.2 (1/8") x 614.5 (24 3/16") x 693 (27 5/16")

UNLESS OTHERWISE SPECIFIED DIMENSIONS ARE IN MILLIMETERS TOLERANCES ARE: DECIMAL ANGLES MACHINED X ±0.1 ±0.5° XX ±0.05 XXX ±0.025 ✓	VEHICLE RESEARCH and TEST CENTER	NATIONAL HIGHWAY TRAFFIC SAFETY ADMINISTRATION
	APPROVALS / DATE	BENCH SEAT PANEL CHILD SIDE IMPACT SLED
	DRAWN: Dave Walker 2/22/2012	
	CHECKED: Mike Vanderburgh 11/15/2012	
MATERIAL: 1018 Steel	ENGINEER:	SIZE: A0 DRAWING NUMBER: 2921-360 C
	APPROVED:	SCALE: 0.5:1 SHEET: 1 OF 1
	APPROVED:	

Bench_Seat_Panel.ipt